CKD

New Products

Electric Actuator Controller Built-in LRX Series

LRXE-BS (Slider Type)
LRXG-STG (Guided Type)

A Brighter Way to Automate Electrification, Simplified

ROBODEX *Pulse Light*

CKD Corporation

CC-1658AA

Integrated Controllers

LRX Series

ROBODEX Pulse Light

Built-in High-Output Controller

Improved Productivity and Space Savings

Expanded Options

•3 operation modes

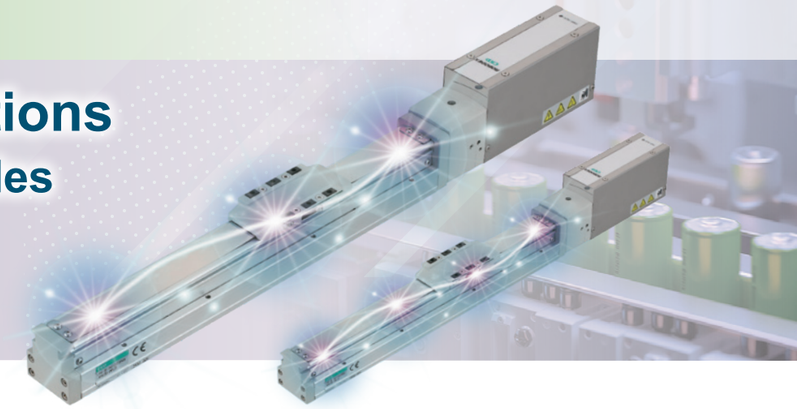

Contributes to Faster Cycle Times

Payload capacity, maximum speed, and acceleration/deceleration have been improved, contributing to shorter positioning times. The fundamental performance of the actuator has been significantly enhanced.

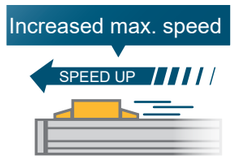

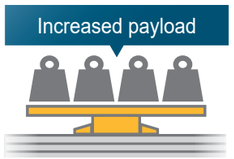

*For LRXE-BS only

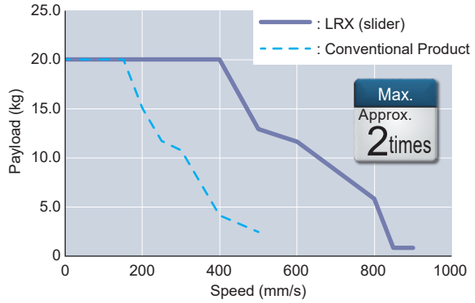

Achieves Control Panel Space Savings

The integration of the actuator and controller eliminates the need to install a controller inside the control panel, resulting in significant space savings.

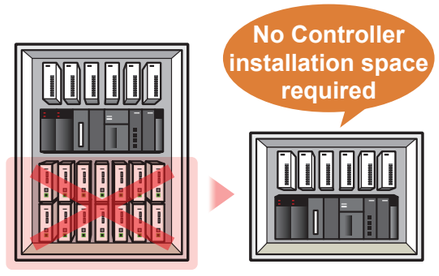

System Configuration

· Easy setup with the common configuration tool S-Tools (free download from our website)
· Configuration PC can be connected via USB mini-B (to be provided by the customer)

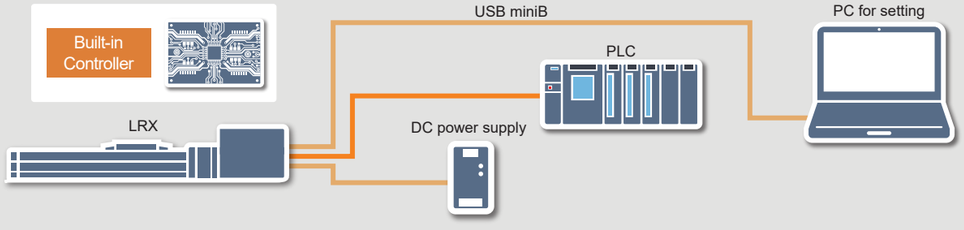

Achieves positioning at up to 4 points

Simple 3-Point Mode (Default Setting)

The actuator moves when the move command signal for the target point is turned ON. If turned OFF mid-move, it will decelerate to a stop.

Example: Moving to Point 3

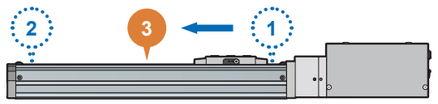

	Number	Code	Name	
Input	0	P1ST	Move to Point 1 Command	
	1	P2ST	Move to Point 2 Command	
	2	P3ST	Move to Point 3 Command	ON
	3	ALMRST	Alarm Reset	

4-Point Mode

After specifying the point number with the point selection bits, the actuator moves when the point move command signal is turned ON. If turned OFF mid-move, it will decelerate to a stop.

Example: Moving to Point 4

1 Specify input numbers 0, 1.
2 Turn ON point move command.

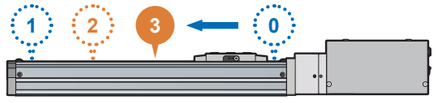

	Number	Code	Name	
Input	0	PSB0	Point Selection Bit 0	1 Specification
	1	PSB1	Point Selection Bit 1	
	2	PST	Point Move Command	2 ON
	3	ALMRST	Alarm Reset	

Solenoid Valve Mode (Single)

Moves between two points by turning a single input signal OFF/ON.

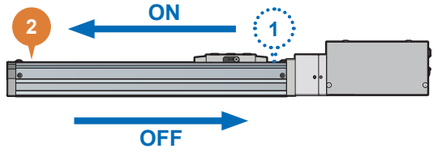

	Number	Code	Name	
Input	0	-	-	
	1	VST	Solenoid Valve Move Command	ON
	2	-	-	
	3	ALMRST	Alarm Reset	

LRXE-BS (Slider Type)

High rigidity | Space saving | Reduced design hours | Reduced number of parts | Reduced man-hours

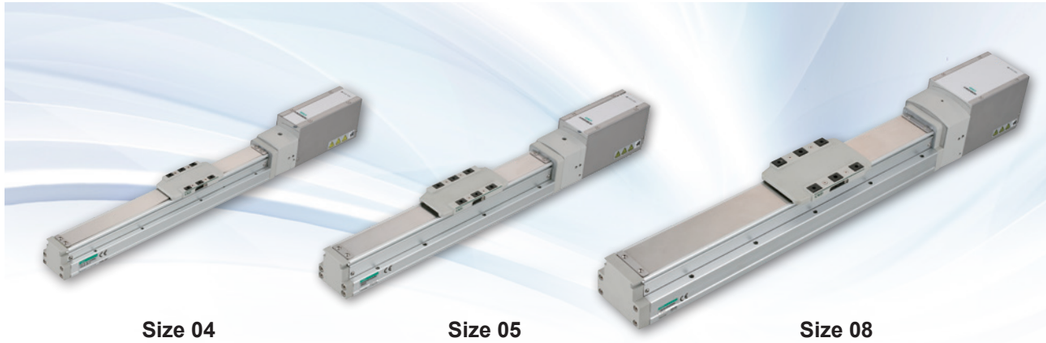

Size 04 Size 05 Size 08

Compact, High-Rigidity Body

An outer rail system is used for the guide that supports the load, achieving both high rigidity and space savings simultaneously.

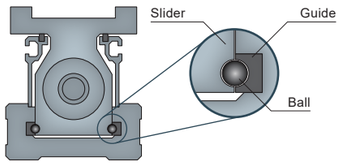

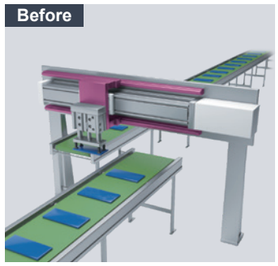

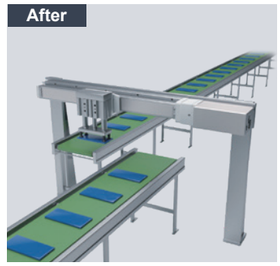

Mounting is possible from both top and bottom surfaces

The structure allows for direct installation from both the top and bottom surfaces without disassembling the product. Top-surface mounting, in particular, can significantly reduce work time.

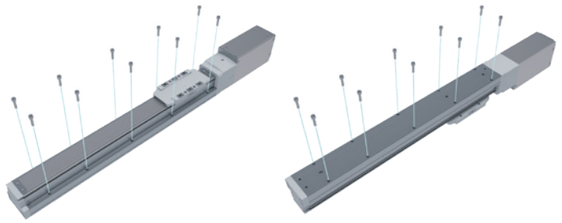

LRXG-STG (Guided Type)

High rigidity | Space saving | Reduced design hours | Reduced number of parts | Long life

Size 20 Size 32 Size 50

Inherits the High Rigidity of Pneumatic Equipment

By using the same body as our pneumatic equipment, we have achieved a level of rigidity not found in conventional electric actuators.

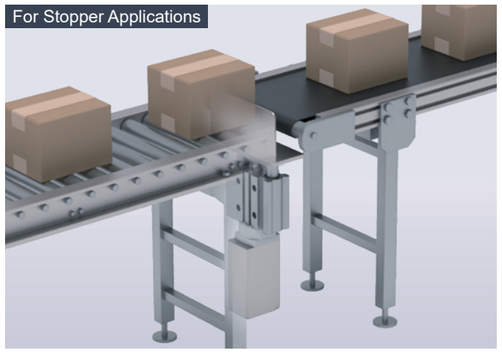

Impact Load (Slide Bearing)

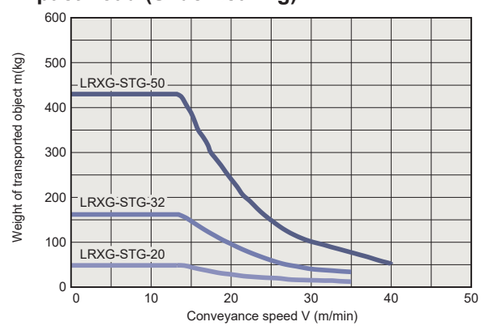

Common Specifications

Battery-less Absolute Specification

Equipped with an absolute encoder that retains current position data. Being a battery-less design, it requires no battery replacement maintenance.

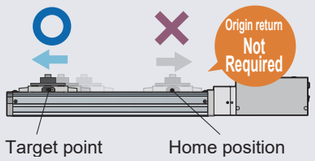

Closed-Loop Control

Closed-loop control enables precise operation by providing feedback on the current position and velocity.

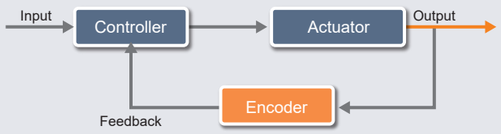

LED Indicates Operating Status

The operating status can be checked externally via the state of the LED.

Separate Main and Control Power Supplies

Separating the control and motor power supplies allows the motor power to be shut off independently.

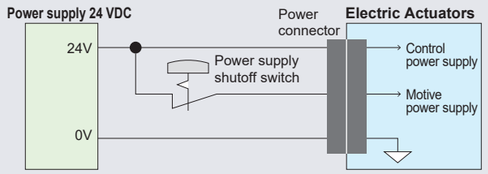

Electric Actuator LRX Series

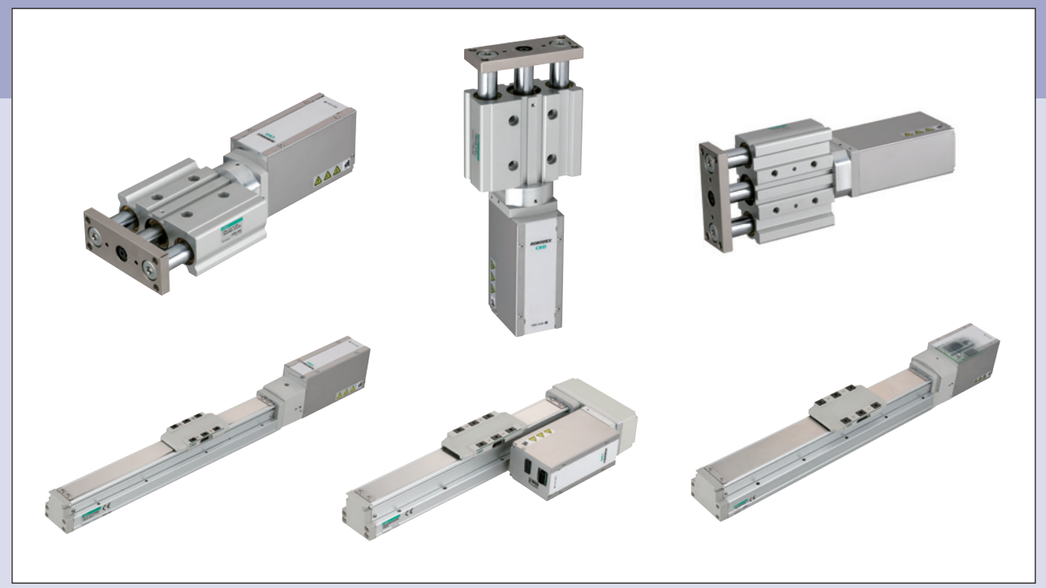

CONTENTS

Product Introduction		Opening Section
■ Slider Type	LRXE-BS	3
■ Guided Type	LRXG-STG	43
■ Built-in Controller		57
⚠ Precautions for Use		62
Model Selection Checklist		66

Controller Built-in
Electric Actuator

LRXE-BS

Slider Type

CONTENTS

Product Introduction — Opening Section
System Chart — 4
● **Specifications/Model No. Notation/Dimensions**
- ● LRXE-BS-04-□ — **6**
- ● LRXE-BS-05-□ — **16**
- ● LRXE-BS-08-□ — **26**

● **Model Selection** — **34**
● **Technical Data** — **36**
⚠ Precautions for Use — 62
Model Selection Checklist — 66

System Chart

Actuator Model No.		Motor Size	Motor Mounting Direction	Body Width (mm)	Screw Lead (mm)	Max. Payload (kg) Horizontal	Max. Payload (kg) Vertical	Max. Pushing Force (N)	Stroke (mm) and maximum speed (mm/s) 50 mm	100	150	200	250	300	350	400	450	500	550	600	650	700	750	800	Published page
	LRXE-BS-04E06	□35	Straight	44	6	20.0	9.2	155	450mm/s									400							6
	LRXE-BS-04E12				12	15.0	3.3	77	900									800							
	LRXE-BS-04$^{R}_{L}$06		Fold-back		6	20.0	9.2	155	375																12
	LRXE-BS-04$^{R}_{L}$12				12	15.0	3.3	77	500																
	LRXE-BS-05E05	□42	Straight	54	5	40.0	14.2	220	375									360	300	260					16
	LRXE-BS-05E10				10	27.5	7.1	110	750									720	615	525					
	LRXE-BS-05E20				20	18.3	2.5	55	1120											1050					
	LRXE-BS-05$^{R}_{L}$05		Fold-back		5	40.0	10.0	220	325										300	260					22
	LRXE-BS-05$^{R}_{L}$10				10	27.5	3.3	110	635										615	525					
	LRXE-BS-05$^{R}_{L}$20				20	18.3	0.8	55	1120											1050					
	LRXE-BS-08E05	□56	Straight	82	5	80.0	43.3	965	230														220	200	26
	LRXE-BS-08E10				10	70.0	28.3	482	430															400	
	LRXE-BS-08E20				20	30.0	3.3	241	650																
	LRXE-BS-08$^{R}_{L}$05		Fold-back		5	80.0	33.3	965	200																30
	LRXE-BS-08$^{R}_{L}$10				10	70.0	21.7	482	430															400	
	LRXE-BS-08$^{R}_{L}$20				20	30.0	3.3	241	650																

* This data is for an acceleration of 0.3 G.
* For wall-mounted installations, the payload capacity is the same as for horizontal installations.

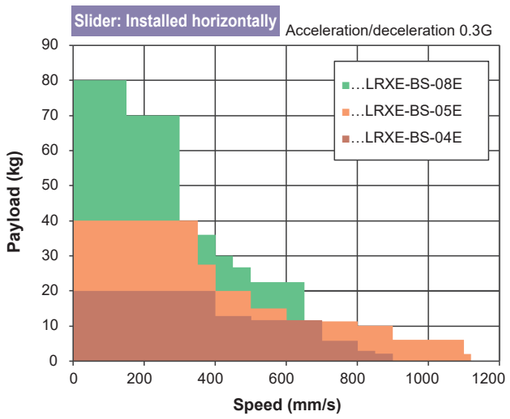

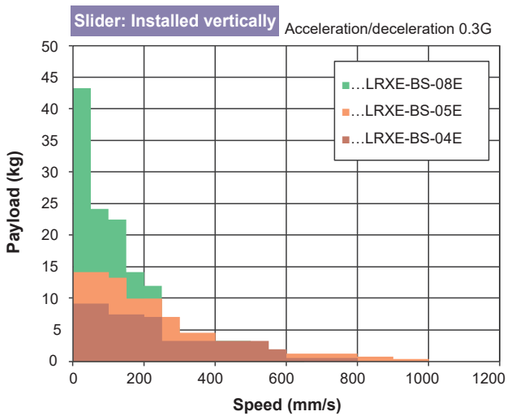

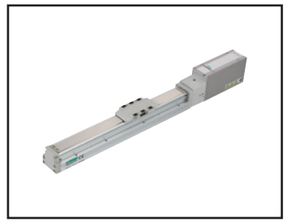

Electric Actuator Slider Type

LRXE-BS-04E

Motor Straight Mounting Type

□35 Stepping Motor

CE RoHS

Model No. Notation

LRXE - BS - 04 E 06 0300 N B N - NP N C 00

❶ ❷ ❸ ❹ ❺ ❻ ❼ ❽ ❾

❶Size

04	Body Width 44 mm

❷MotorMountingDirection

E	Straight Mounting

❸Screw Lead

06	6mm
12	12mm

❹Stroke

0050 to 0500	50mm (per 50 mm) 500mm

❺Brake *1

N	Without
B	With

❻Encoder

B	Batteryless Absolute Encoder

❼Interface

NP	Parallel I/O

❽Motor Arrangement

N	Standard
R	Right Side
L	Left Side

❾For Movable Cable

00	Without
01	1m
03	3m
05	5m
10	10m

*1 Select "With" for vertical use.

Specifications

Motor		□35 Stepping Motor	
Encoder Type		Batteryless Absolute Encoder	
Driving Method		Ball Screw ø10	
Controller		Built-in	
Stroke	mm	50 to 500	
Screw Lead	mm	6	12
Max. Payload (kg) *1	Horizontal	20.0	15.0
	Vertical	9.2	3.3
Operating Speed Range *2 (mm/s)		7 to 450	15 to 900
Max. Acceleration/ Deceleration (G)	Horizontal	1.0	
	Vertical	0.5	
Max.Pushing Force	N	155	77
Pressing Operation Speed Range (mm/s)		5 to 20	
Repeatability	(mm)	±0.01	
Lost Motion	(mm)	0.1 or less	
Static Allowable Moment	(N·m)	MP: 62 MY: 62 MR: 92	
Setting Tool		Setting Software (S-Tools) Connection Cable: USB Cable (mini-B)	
External Interface	Parallel I/O Specifications	24 VDC ±10% Max. 4 points each for I/O, Cable length Max. 10 m	
Power Supply Voltage	*3	24 VDC ±10%	
Current Consumption	Control A	0.12	
	Motive A	4.0	
Brake	Model, Power supply voltage *3	Non-Excitation-Actuated Type, 24 VDC ±10%	
	Power Consumption (W)	6.1	
	Holding Force (N)	140	70
Insulation Resistance		10 MΩ or more at 500 VDC	
Withstand Voltage		500 VAC for 1 minute	
Ambient Temperature and Humidity		10 to 40°C (with no freezing) 35 to 80%RH (with no condensation)	
Storage Ambient Temperature and Humidity		-10 to 50°C (with no freezing) 35 to 80%RH (with no condensation)	
Atmosphere		No corrosive gas, explosive gas, or dust	
Protection Structure		IP20	

*1 Payload capacity varies depending on acceleration/deceleration and speed. For details, please refer to P. 7.
*2 Maximum speed may decrease depending on conditions.
*3 If the cable length exceeds 5 m, the power supply voltage must be 24 VDC ±5%., the power supply voltage must be 24 VDC ±5%.

Stroke and Max. Speed

(mm/s)

Screw Lead (mm)	Stroke (mm) 50 to 450	Stroke (mm) 500
6	450	400
12	900	800

Speed and Payload

[For Horizontal Installation]

(kg)

Speed (mm/s)	Screw Lead (mm) 6 Acceleration/Deceleration (G) 0.3	0.5	0.7	1.0	12 0.3	0.5	0.7	1.0
7	20.0	20.0	20.0	16.7				
15	20.0	20.0	20.0	16.7	15.0	15.0	14.2	5.4
100	20.0	20.0	20.0	16.7	15.0	15.0	14.2	5.4
150	20.0	20.0	18.3	15.0	15.0	10.0	8.3	5.4
200	20.0	20.0	15.0	14.2	15.0	10.0	8.3	5.4
300	20.0	20.0	15.0	12.1	15.0	10.0	8.3	5.4
350	20.0	20.0	13.3	12.1	15.0	10.0	8.3	5.4
400	20.0	20.0	13.3	9.2	15.0	10.0	8.3	5.4
450	11.7	11.7	11.7	8.3	12.9	10.0	8.3	5.4
500					12.9	10.0	8.3	5.4
600					11.7	9.2	7.5	5.4
700					11.7	8.3	5.8	5.4
800					5.8	5.8	5.8	2.5
850					2.9	2.5	2.5	1.7
900					2.1	1.7	1.7	0.8

[For Vertical Installation]

(kg)

Speed (mm/s)	Screw Lead (mm) 6 Acceleration/Deceleration (G) 0.3	0.5	12 0.3	0.5
7	9.2	9.2		
15	9.2	9.2	3.3	3.3
200	7.5	7.5	3.3	3.3
250	7.1	5.8	3.3	3.3
300	5.4	4.2	3.3	3.3
350	2.5	1.7	3.3	3.3
400	1.7		3.3	3.3
500			3.3	3.3
600			2.0	2.0
800			0.8	0.8

Pushing Force

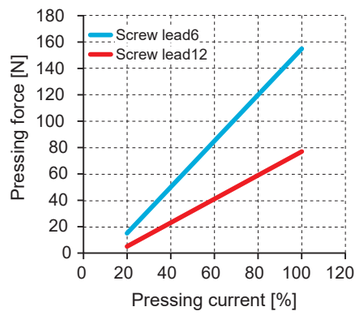

* The thrust force values above are for reference only. They may vary depending on conditions such as the pushing speed.

External Dimensions Drawing: Motor Straight / Standard Motor Arrangement

● LRXE-BS-04E-N

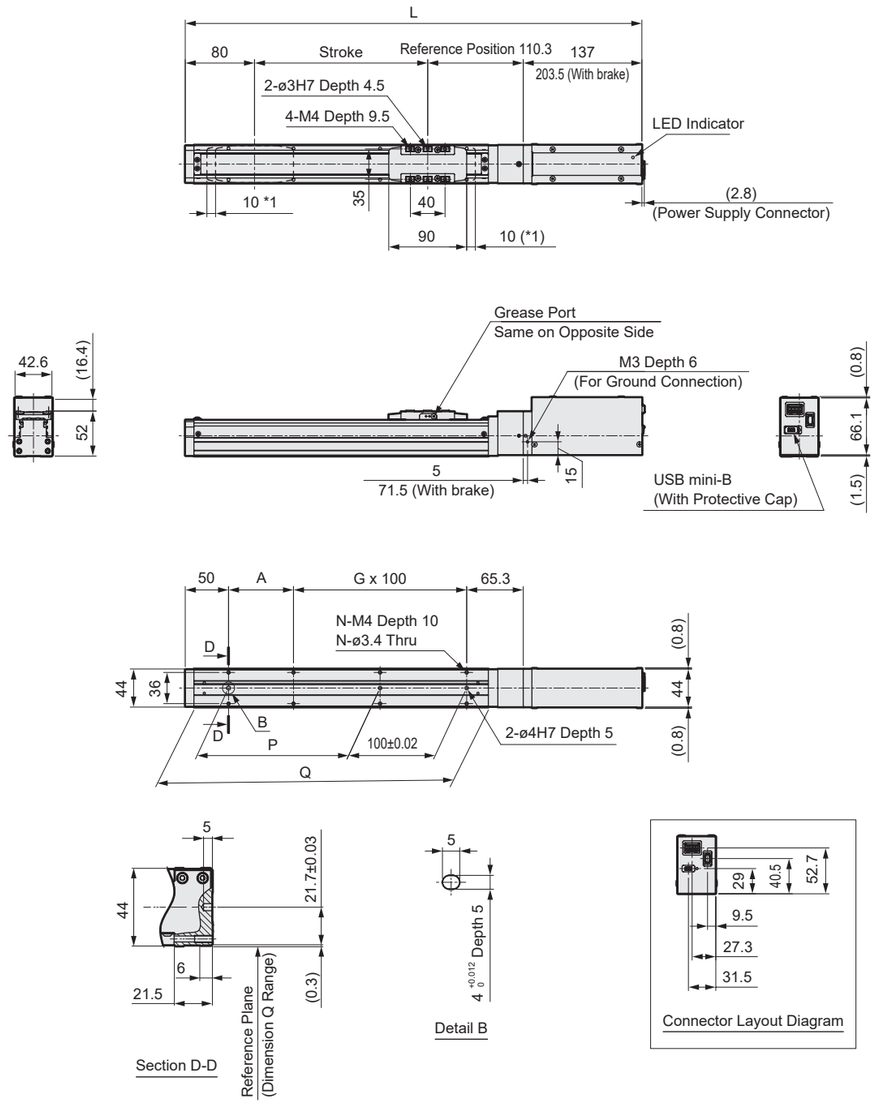

*1: Operating range to the mechanical stopper.

Stroke Code		0050	0100	0150	0200	0250	0300	0350	0400	0450	0500
Stroke (mm)		50	100	150	200	250	300	350	400	450	500
L	Without brake	377.3	427.3	477.3	527.3	577.3	627.3	677.3	727.3	777.3	827.3
	With brake	443.8	493.8	543.8	593.8	643.8	693.8	743.8	793.8	843.8	893.8
A		25	75	25	75	25	75	25	75	25	75
G		1	1	2	2	3	3	4	4	5	5
N		6	6	8	8	10	10	12	12	14	14
P		25	75	125	175	225	275	325	375	425	475
Q		190	240	290	340	390	440	490	540	590	640
Weight (kg)	Without brake	1.7	1.8	1.9	2.0	2.1	2.3	2.4	2.5	2.6	2.7
	With brake	2.1	2.2	2.3	2.4	2.6	2.7	2.8	2.9	3.0	3.2

External Dimensions Drawing: Motor Straight / Right-Side Motor Arrangement

● LRXE-BS-04E-R

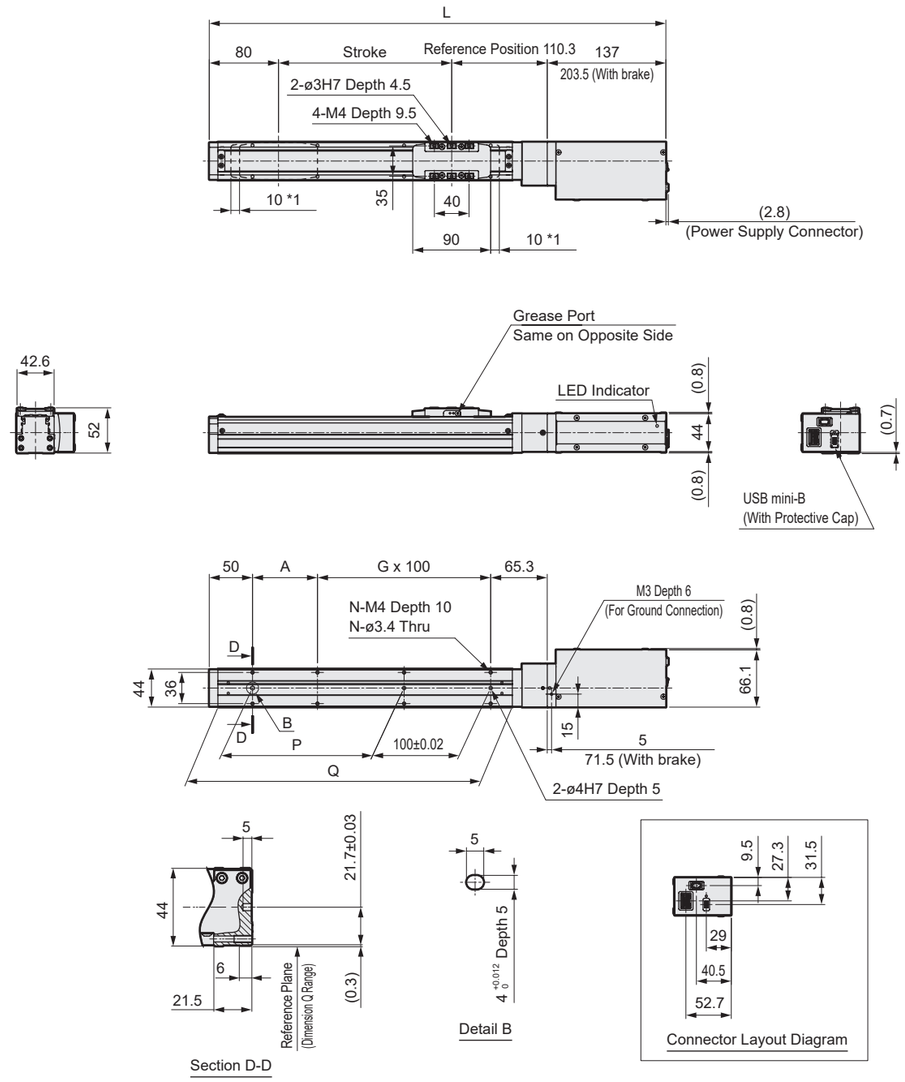

*1: Operating range to the mechanical stopper

Stroke Code		0050	0100	0150	0200	0250	0300	0350	0400	0450	0500
Stroke (mm)		50	100	150	200	250	300	350	400	450	500
L	Without brake	377.3	427.3	477.3	527.3	577.3	627.3	677.3	727.3	777.3	827.3
	With brake	443.8	493.8	543.8	593.8	643.8	693.8	743.8	793.8	843.8	893.8
A		25	75	25	75	25	75	25	75	25	75
G		1	1	2	2	3	3	4	4	5	5
N		6	6	8	8	10	10	12	12	14	14
P		25	75	125	175	225	275	325	375	425	475
Q		190	240	290	340	390	440	490	540	590	640
Weight (kg)	Without brake	1.7	1.8	1.9	2.0	2.1	2.3	2.4	2.5	2.6	2.7
	With brake	2.1	2.2	2.3	2.4	2.6	2.7	2.8	2.9	3.0	3.2

LRXE-BS-04E

External Dimensions Drawing: Motor Straight / Left-Side Motor Arrangement

● **LRXE-BS-04E-L**

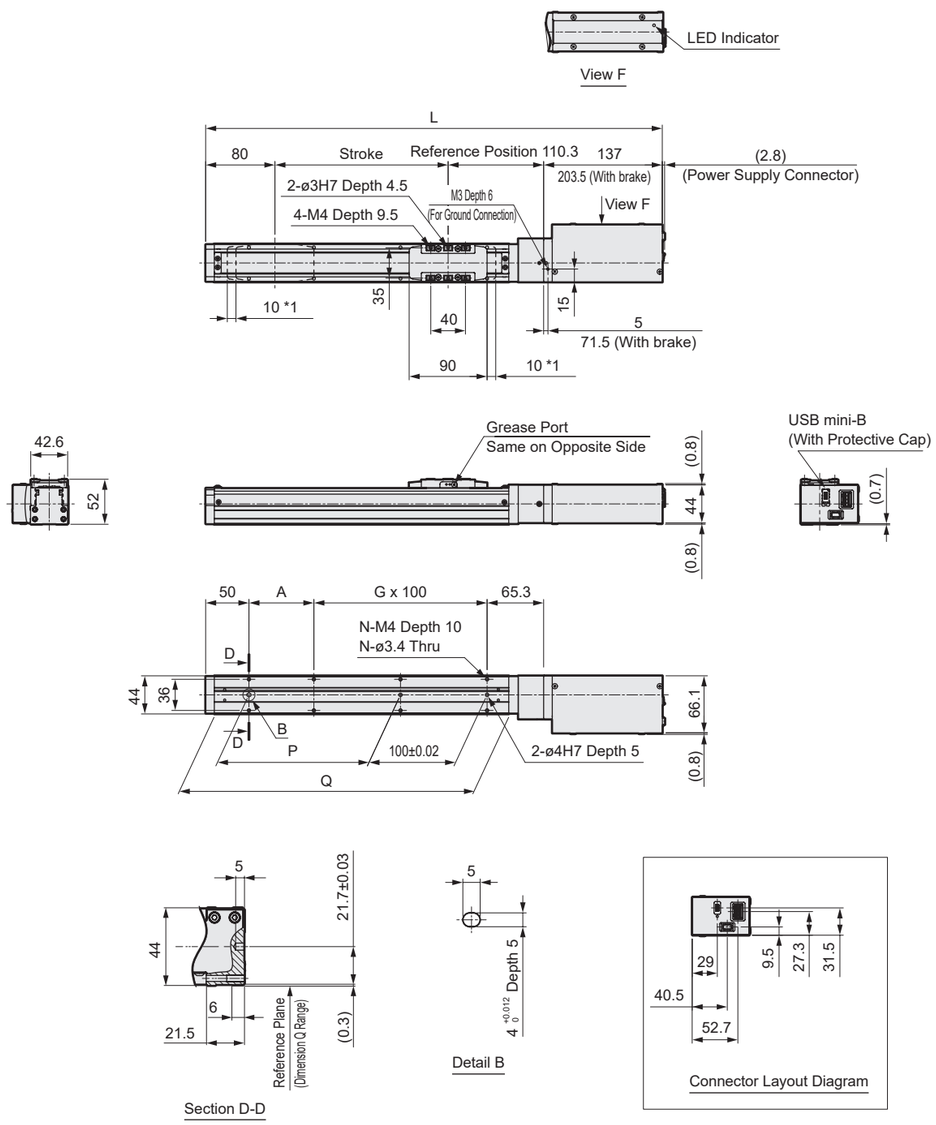

*1: Operating range to the mechanical stopper

Stroke Code		0050	0100	0150	0200	0250	0300	0350	0400	0450	0500
Stroke (mm)		50	100	150	200	250	300	350	400	450	500
L	Without brake	377.3	427.3	477.3	527.3	577.3	627.3	677.3	727.3	777.3	827.3
	With brake	443.8	493.8	543.8	593.8	643.8	693.8	743.8	793.8	843.8	893.8
A		25	75	25	75	25	75	25	75	25	75
G		1	1	2	2	3	3	4	4	5	5
N		6	6	8	8	10	10	12	12	14	14
P		25	75	125	175	225	275	325	375	425	475
Q		190	240	290	340	390	440	490	540	590	640
Weight (kg)	Without brake	1.7	1.8	1.9	2.0	2.1	2.3	2.4	2.5	2.6	2.7
	With brake	2.1	2.2	2.3	2.4	2.6	2.7	2.8	2.9	3.0	3.2

MEMO

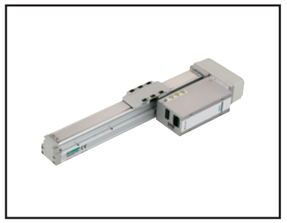

Electric Actuator Slider Type

LRXE-BS-04□

Fold-back Motor Mounting Type

□35 Stepping Motor

CE RoHS

Model No. Notation

LRXE - BS - 04 R 06 0300 N B N - NP N C 00

❶ ❷ ❸ ❹ ❺ ❻ ❼ ❽

❶Size

04	Body Width 44 mm

❷MotorMountingDirection

R	Right Folded-back Mounting
L	Left Folded-back Mounting

❸Screw Lead

06	6mm
12	12mm

❹Stroke

0050 to 0500	50mm (per 50 mm) 500mm

❺Brake *1

N	Without
B	With

❻Encoder

B	Batteryless Absolute Encoder

❼Interface

NP	Parallel I/O

❽For Movable Cable

00	Without
01	1m
03	3m
05	5m
10	10m

*1 Select "With" for vertical use.

Specifications

Motor		□35 Stepping Motor	
Encoder Type		Batteryless Absolute Encoder	
Driving Method		Ball Screw ø10	
Controller		Built-in	
Stroke mm		50 to 500	
Screw Lead mm		6	12
Max. Payload (kg) *1	Horizontal	20.0	15.0
	Vertical	9.2	3.3
Operating Speed Range *2 (mm/s)		7 to 375	15 to 500
Max. Acceleration/ Deceleration (G)	Horizontal	1.0	
	Vertical	0.5	
Max.Pushing Force N		155	77
Pressing Operation Speed Range (mm/s)		5 to 20	
Repeatability (mm)		±0.01	
Lost Motion (mm)		0.1 or less	
Static Allowable Moment (N·m)		MP: 62 MY: 62 MR: 92	
Setting Tool		Setting Software (S-Tools) Connection Cable: USB Cable (mini-B)	
External Interface	Parallel I/O Specifications	24 VDC ±10% Max. 4 points each for I/O, Cable length Max. 10 m	
Power Supply Voltage *3		24 VDC ±10%	
Current Consumption	Control A	0.12	
	Motive A	4.0	
Brake	Model, Power supply voltage *3	Non-Excitation-Actuated Type, 24 VDC ±10%	
	Power Consumption (W)	6.1	
	Holding Force (N)	140	70
Insulation Resistance		10 MΩ or more at 500 VDC	
Withstand Voltage		500 VAC for 1 minute	
Ambient Temperature and Humidity		10 to 40°C (with no freezing) 35 to 80%RH (with no condensation)	
Storage Ambient Temperature and Humidity		-10 to 50°C (with no freezing) 35 to 80%RH (with no condensation)	
Atmosphere		No corrosive gas, explosive gas, or dust	
Protection Structure		IP20	

*1 Payload capacity varies depending on acceleration/deceleration and speed. For details, please refer to P. 13.
*2 Maximum speed may decrease depending on conditions.
*3 If the cable length exceeds 5 m, the power supply voltage must be 24 VDC ±5%., the power supply voltage must be 24 VDC ±5%.

Stroke and Max. Speed

(mm/s)

Screw Lead (mm)	Stroke (mm) 50 to 500
6	375
12	500

Speed and Payload

[For Horizontal Installation]

(kg)

Speed (mm/s)	Screw Lead(mm) 6 Acceleration/Deceleration (G) 0.3	0.5	0.7	1.0	12 0.3	0.5	0.7	1.0
7	20.0	20.0	20.0	16.7				
15	20.0	20.0	20.0	16.7	15.0	15.0	14.2	5.4
100	20.0	20.0	20.0	16.7	15.0	15.0	14.2	5.4
150	20.0	20.0	18.3	15.0	15.0	10.0	8.3	5.4
200	20.0	20.0	15.0	14.2	15.0	10.0	8.3	5.4
250	20.0	20.0	15.0	12.1	15.0	10.0	8.3	5.4
300	20.0	20.0	15.0	11.7	15.0	10.0	8.3	5.4
350	20.0	16.7	10.0	10.0	15.0	10.0	8.3	5.4
375	15.0	13.3	8.3	5.0	15.0	10.0	8.3	5.4
400					15.0	10.0	8.3	5.4
450					11.7	10.0	8.3	5.4
500					0.8	0.8	0.8	

[For Vertical Installation]

(kg)

Speed (mm/s)	Screw Lead (mm) 6 Acceleration/Deceleration (G) 0.3	0.5	12 0.3	0.5
7	9.2	9.2		
15	9.2	9.2	3.3	3.3
150	9.2	8.3	3.3	3.3
200	7.5	7.5	3.3	3.3
250	5.8	5.8	3.3	3.3
300	4.6	4.2	3.3	3.3
350	2.5	1.7	3.3	3.3
375	0.8		3.3	3.3
450			2.1	2.1
500			0.8	0.8

Pushing Force

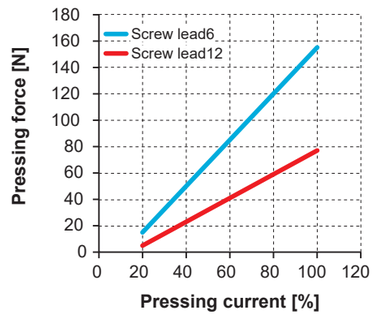

* The thrust force values above are for reference only. They may vary depending on conditions such as the pushing speed.

External Dimensions Drawing: Motor Right Folded-back Mounting

● LRXE-BS-04R

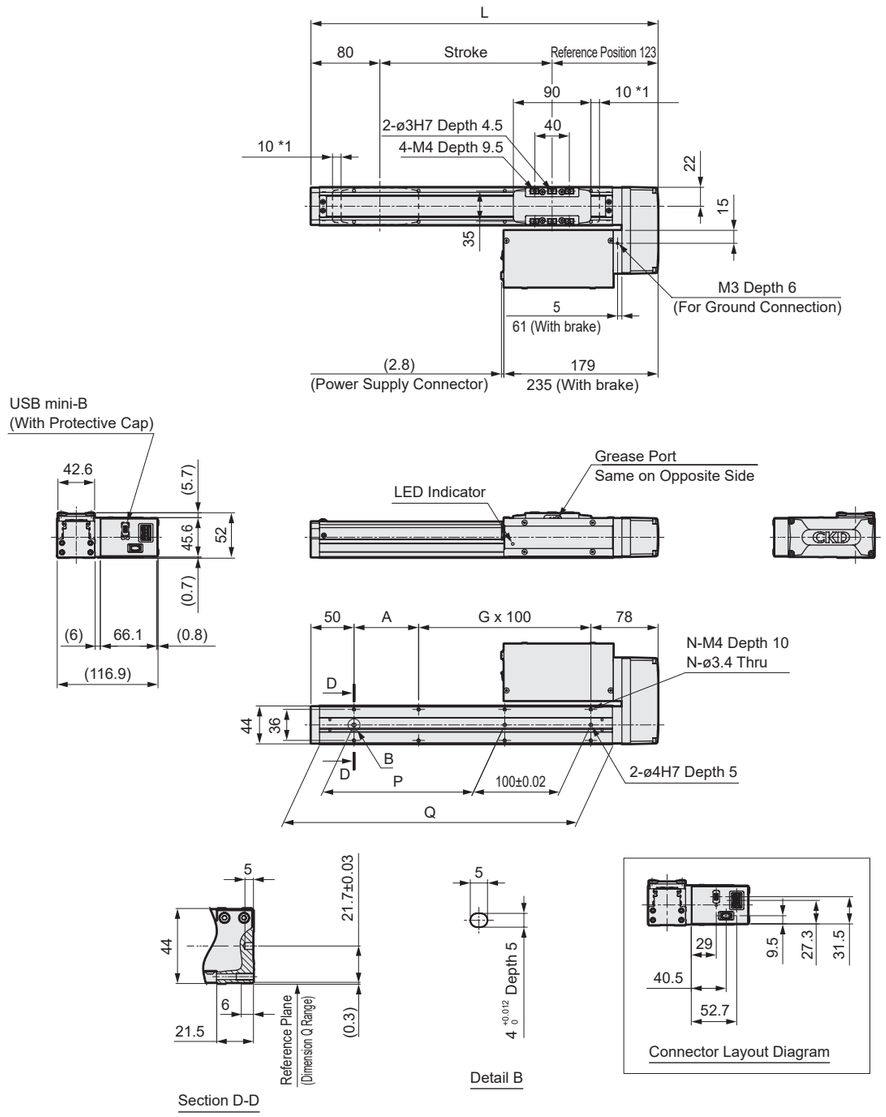

*1: Operating range to the mechanical stopper

Stroke Code		0050	0100	0150	0200	0250	0300	0350	0400	0450	0500
Stroke (mm)		50	100	150	200	250	300	350	400	450	500
L		253	303	353	403	453	503	553	603	653	703
A		25	75	25	75	25	75	25	75	25	75
G		1	1	2	2	3	3	4	4	5	5
N		6	6	8	8	10	10	12	12	14	14
P		25	75	125	175	225	275	325	375	425	475
Q		190	240	290	340	390	440	490	540	590	640
Weight (kg)	Without brake	1.8	1.9	2.0	2.1	2.3	2.4	2.5	2.6	2.7	2.9
	With brake	2.2	2.3	2.4	2.6	2.7	2.8	2.9	3.0	3.2	3.3

External Dimensions Drawing: Motor Left Folded-back Mounting

● LRXE-BS-04L

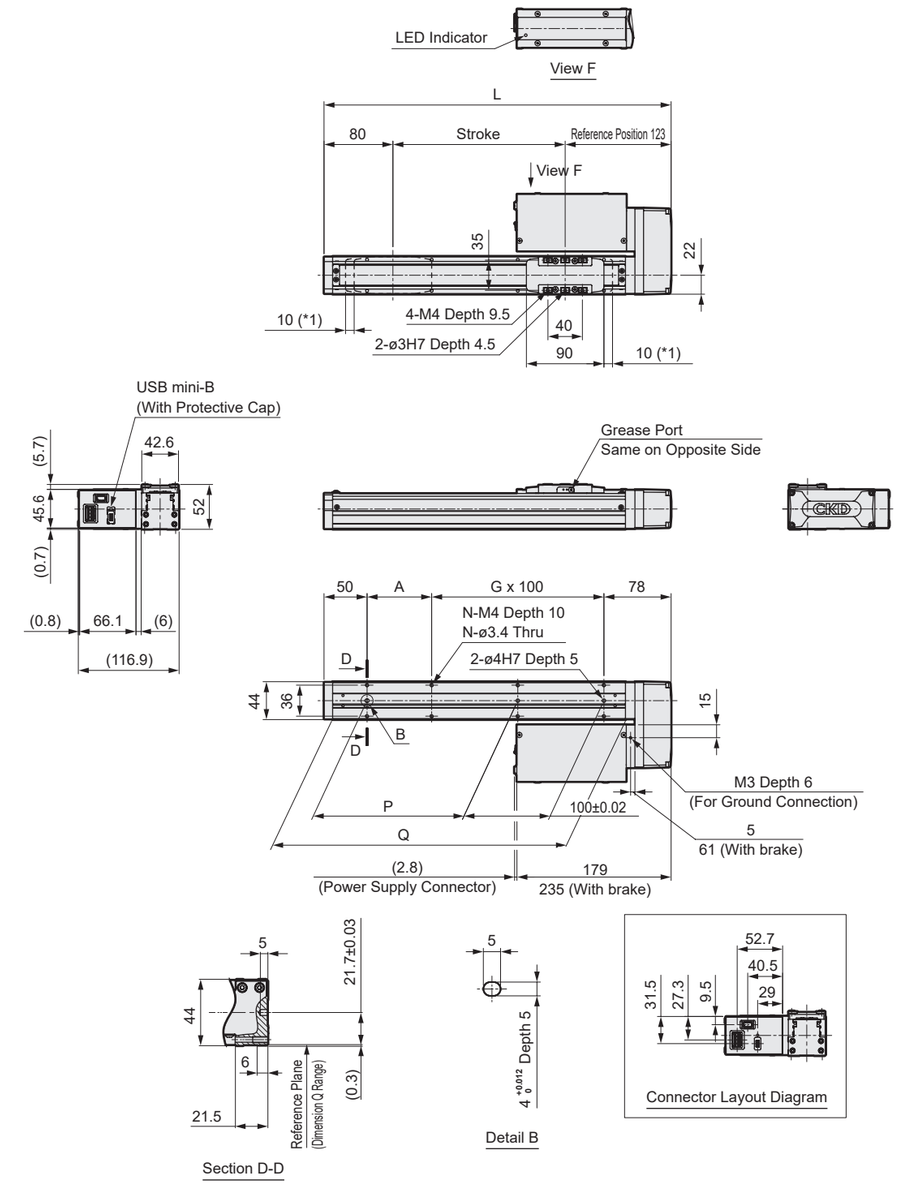

*1: Operating range to the mechanical stopper

Stroke Code		0050	0100	0150	0200	0250	0300	0350	0400	0450	0500
Stroke (mm)		50	100	150	200	250	300	350	400	450	500
L		253	303	353	403	453	503	553	603	653	703
A		25	75	25	75	25	75	25	75	25	75
G		1	1	2	2	3	3	4	4	5	5
N		6	6	8	8	10	10	12	12	14	14
P		25	75	125	175	225	275	325	375	425	475
Q		190	240	290	340	390	440	490	540	590	640
Weight (kg)	Without brake	1.8	1.9	2.0	2.1	2.3	2.4	2.5	2.6	2.7	2.9
	With brake	2.2	2.3	2.4	2.6	2.7	2.8	2.9	3.0	3.2	3.3

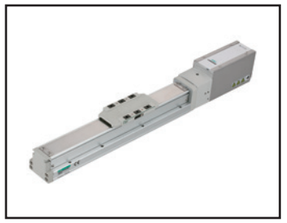

Electric Actuator Slider Type

LRXE-BS-05E

Motor Straight Mounting Type

□42 Stepping Motor

CE RoHS

Model No. Notation

LRXE - BS - 05 E 10 0300 N B N - NP N C 00

❶ ❷ ❸ ❹ ❺ ❻ ❼ ❽ ❾

❶Size

05	Body Width 54 mm

❷Motor Mounting Direction

E	Straight Mounting

❸Screw Lead

05	5mm
10	10mm
20	20mm

❹Stroke

0050 to 0600	50mm (per 50 mm) 600mm

❺Brake *1

N	Without
B	With

❻Encoder

B	Batteryless Absolute Encoder

❼Interface

NP	Parallel I/O

❽Motor Arrangement

N	Standard
R	Right Side
L	Left Side

❾For Movable Cable

00	Without
01	1m
03	3m
05	5m
10	10m

*1 Select "With" for vertical use.

Specifications

Motor		□42 Stepping Motor		
Encoder Type		Batteryless Absolute Encoder		
Driving Method		Ball Screw ø12		
Controller		Built-in		
Stroke mm		50 to 600		
Screw Lead mm		5	10	20
Max. Payload (kg) *1	Horizontal	40.0	27.5	18.3
	Vertical	14.2	7.1	2.5
Operating Speed Range *2 (mm/s)		6 to 375	12 to 750	25 to 1120
Max. Acceleration/ Deceleration (G)	Horizontal	1.0		
	Vertical	0.5		
Max. Pushing Force (N)		220	110	55
Pressing Operation Speed Range (mm/s)		5 to 20		
Repeatability (mm)		±0.01		
Lost Motion (mm)		0.1 or less		
Static Allowable Moment (N·m)		MP: 103 MY: 103 MR: 144		
Setting Tool		Setting Software (S-Tools) Connection Cable: USB Cable (mini-B)		
External Interface	Parallel I/O Specifications	24 VDC ±10% Max. 4 points each for I/O, Cable length Max. 10 m		
Power Supply Voltage *3		24 VDC ±10%		
Current Consumption	Control A	0.12		
	Motive A	4.5		
Brake	Model, Power supply voltage *3	Non-Excitation-Actuated Type, 24 VDC ±10%		
	Power Consumption (W)	6.1		
	Holding Force (N)	168	84	42
Insulation Resistance		10 MΩ or more at 500 VDC		
Withstand Voltage		500 VAC for 1 minute		
Ambient Temperature and Humidity		10 to 40°C (with no freezing) 35 to 80%RH (with no condensation)		
Storage Ambient Temperature and Humidity		-10 to 50°C (with no freezing) 35 to 80%RH (with no condensation)		
Atmosphere		No corrosive gas, explosive gas, or dust		
Protection Structure		IP20		

*1 Payload capacity varies depending on acceleration/deceleration and speed. For details, refer to P. 17.
*2 Maximum speed may decrease depending on conditions.
*3 If the cable length exceeds 5 m, the power supply voltage must be 24 VDC ±5%., the power supply voltage should be 24 V ±5%.

Stroke and Max. Speed

(mm/s)

Screw Lead (mm)	Stroke (mm) 50 to 450	500	550	600
5	375	360	300	260
10	750	720	615	525
20	1120			1050

Speed and Payload

[For Horizontal Installation]

(kg)

Speed (mm/s)	Screw Lead (mm) 5				10				20			
	Acceleration/Deceleration (G) 0.3	0.5	0.7	1.0	0.3	0.5	0.7	1.0	0.3	0.5	0.7	1.0
6	40.0	40.0	40.0	40.0								
12	40.0	40.0	40.0	40.0	27.5	25.0	23.3	22.9				
25	40.0	40.0	40.0	40.0	27.5	25.0	23.3	22.9	9.5	11.7	8.7	8.3
100	40.0	40.0	40.0	40.0	27.5	25.0	23.3	22.9	18.3	11.7	10.0	7.5
200	40.0	40.0	40.0	30.4	27.5	25.0	18.3	14.2	18.3	11.7	10.0	6.7
250	40.0	40.0	33.3	20.4	27.5	25.0	18.3	12.9	15.0	11.7	8.3	6.3
300	40.0	40.0	24.2	13.8	27.5	25.0	18.3	12.9	15.0	11.7	8.3	6.3
350	40.0	35.8	24.2	9.2	27.5	25.0	18.3	12.9	15.0	11.7	8.3	6.3
375	20.0	20.0	17.5	7.9	27.5	25.0	18.3	12.9	15.0	11.7	8.3	6.3
400					27.5	25.0	18.3	12.9	15.0	11.7	8.3	6.3
500					20.4	20.4	18.3	10.8	13.3	10.0	8.3	6.3
600					15.0	15.0	15.0	6.3	13.3	10.0	8.3	6.3
700					6.7	6.7	6.7	3.3	11.3	8.3	6.7	5.0
750					2.9	2.9	2.9	2.9	11.3	7.5	6.7	4.2
800									11.3	7.5	6.7	4.2
900									10.0	7.5	6.7	4.2
1000									6.3	6.3	5.0	2.9
1100									6.3	4.2	2.5	1.7
1120									2.1	2.1	2.1	1.7

[For Vertical Installation]

(kg)

Speed (mm/s)	Screw Lead (mm) 5		10		20	
	Acceleration/Deceleration (G) 0.3	0.5	0.3	0.5	0.3	0.5
6	14.2	14.2				
12	14.2	14.2	7.1	7.1		
25	14.2	14.2	7.1	7.1	0.8	1.25
100	14.2	14.2	7.1	7.1	2.5	2.5
150	13.3	12.5	7.1	7.1	2.5	2.5
250	10.0	9.1	7.1	7.1	2.5	2.5
300	6.3	6.3	7.1	7.1	2.5	2.5
350	2.9	2.9	4.6	3.8	2.5	2.5
375	1.3	1.3	4.6	3.8	2.5	2.5
400			4.6	3.8	2.5	2.5
500			2.5	1.7	1.3	1.3
600			1.7	0.8	1.3	1.3
650			0.8		1.3	1.3
800					1.3	1.3
900					0.8	0.8
1000					0.4	

Pushing Force

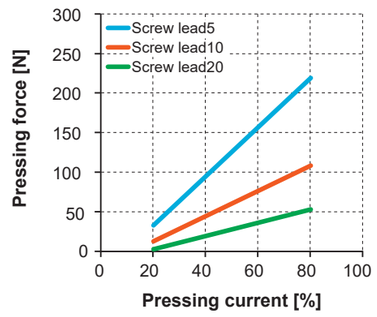

* The thrust force values above are for reference only. They may vary depending on conditions such as the pushing speed.

External Dimensions Drawing: Motor Straight / Motor Arrangement Standard

● LRXE-BS-05E-N

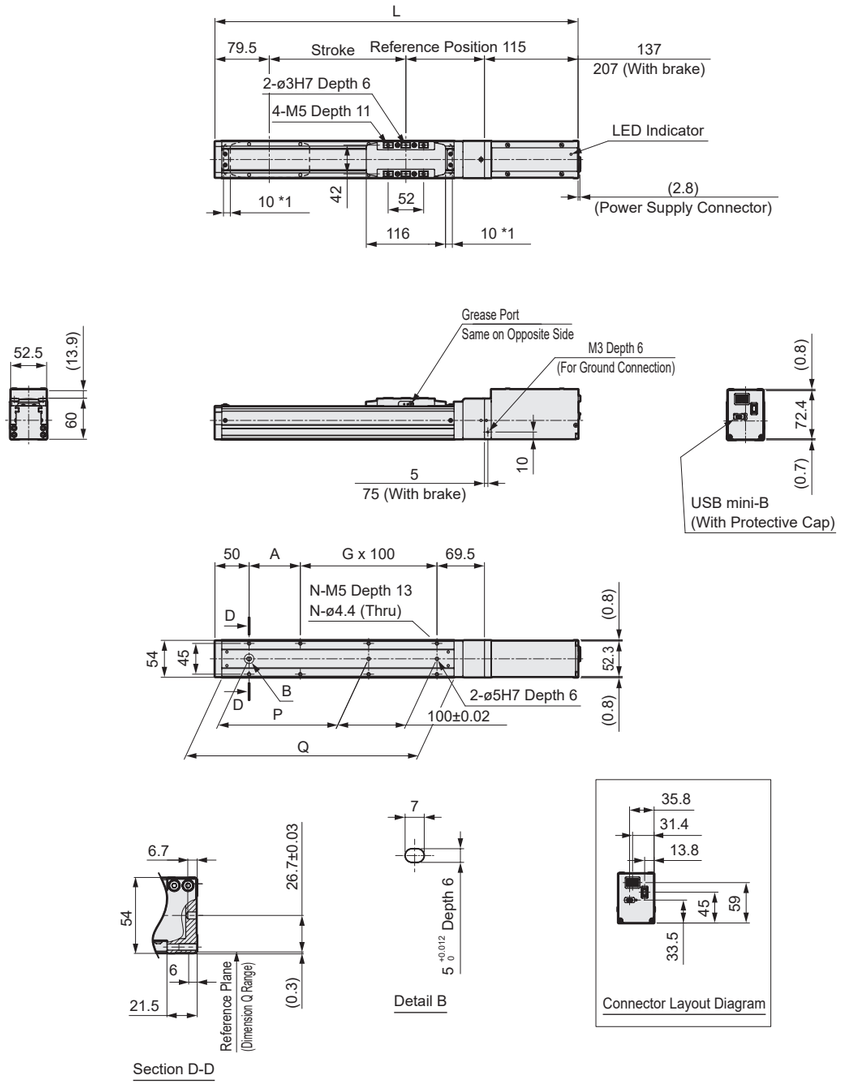

*1: Operating range to the mechanical stopper

Stroke Code		0050	0100	0150	0200	0250	0300	0350	0400	0450	0500	0550	0600
Stroke (mm)		50	100	150	200	250	300	350	400	450	500	550	600
L	Without brake	381.5	431.5	481.5	531.5	581.5	631.5	681.5	731.5	781.5	831.5	881.5	931.5
	With brake	451.5	501.5	551.5	601.5	651.5	701.5	751.5	801.5	851.5	901.5	951.5	1001.5
A		25	75	25	75	25	75	25	75	25	75	25	75
G		1	1	2	2	3	3	4	4	5	5	6	6
N		6	6	8	8	10	10	12	12	14	14	16	16
P		25	75	125	175	225	275	325	375	425	475	525	575
Q		190	240	290	340	390	440	490	540	590	640	690	740
Weight (kg)	Without brake	2.6	2.8	2.9	3.0	3.2	3.3	3.5	3.6	3.7	3.9	4.0	4.2
	With brake	3.4	3.5	3.7	3.8	3.9	4.1	4.2	4.4	4.5	4.6	4.8	4.9

External Dimensions Drawing: Motor Straight / Motor Arrangement Right Side

● LRXE-BS-05E-R

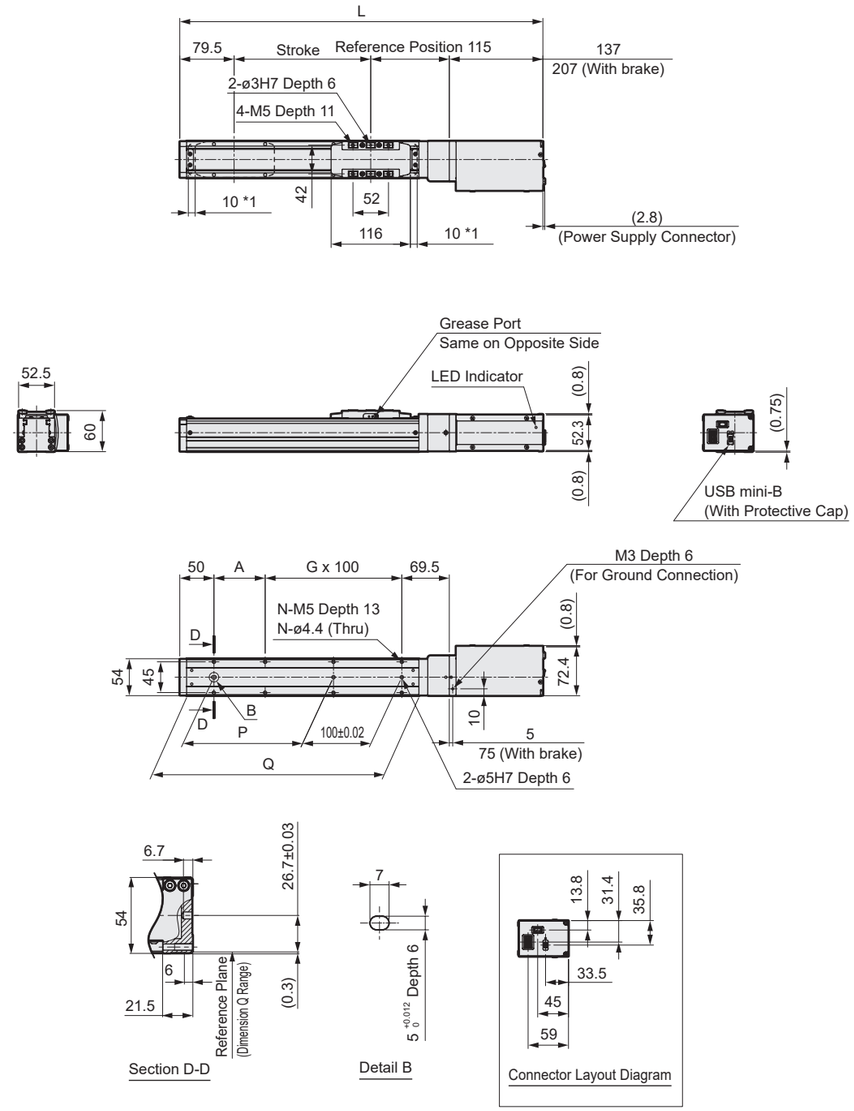

*1: Operating range to the mechanical stopper

Stroke Code		0050	0100	0150	0200	0250	0300	0350	0400	0450	0500	0550	0600
Stroke (mm)		50	100	150	200	250	300	350	400	450	500	550	600
L	Without brake	381.5	431.5	481.5	531.5	581.5	631.5	681.5	731.5	781.5	831.5	881.5	931.5
	With brake	451.5	501.5	551.5	601.5	651.5	701.5	751.5	801.5	851.5	901.5	951.5	1001.5
A		25	75	25	75	25	75	25	75	25	75	25	75
G		1	1	2	2	3	3	4	4	5	5	6	6
N		6	6	8	8	10	10	12	12	14	14	16	16
P		25	75	125	175	225	275	325	375	425	475	525	575
Q		190	240	290	340	390	440	490	540	590	640	690	740
Weight (kg)	Without brake	2.6	2.8	2.9	3.0	3.2	3.3	3.5	3.6	3.7	3.9	4.0	4.2
	With brake	3.4	3.5	3.7	3.8	3.9	4.1	4.2	4.4	4.5	4.6	4.8	4.9

LRXE-BS-05E

External Dimensions Drawing: Motor Straight / Motor Arrangement Left Side

● LRXE-BS-05E-L

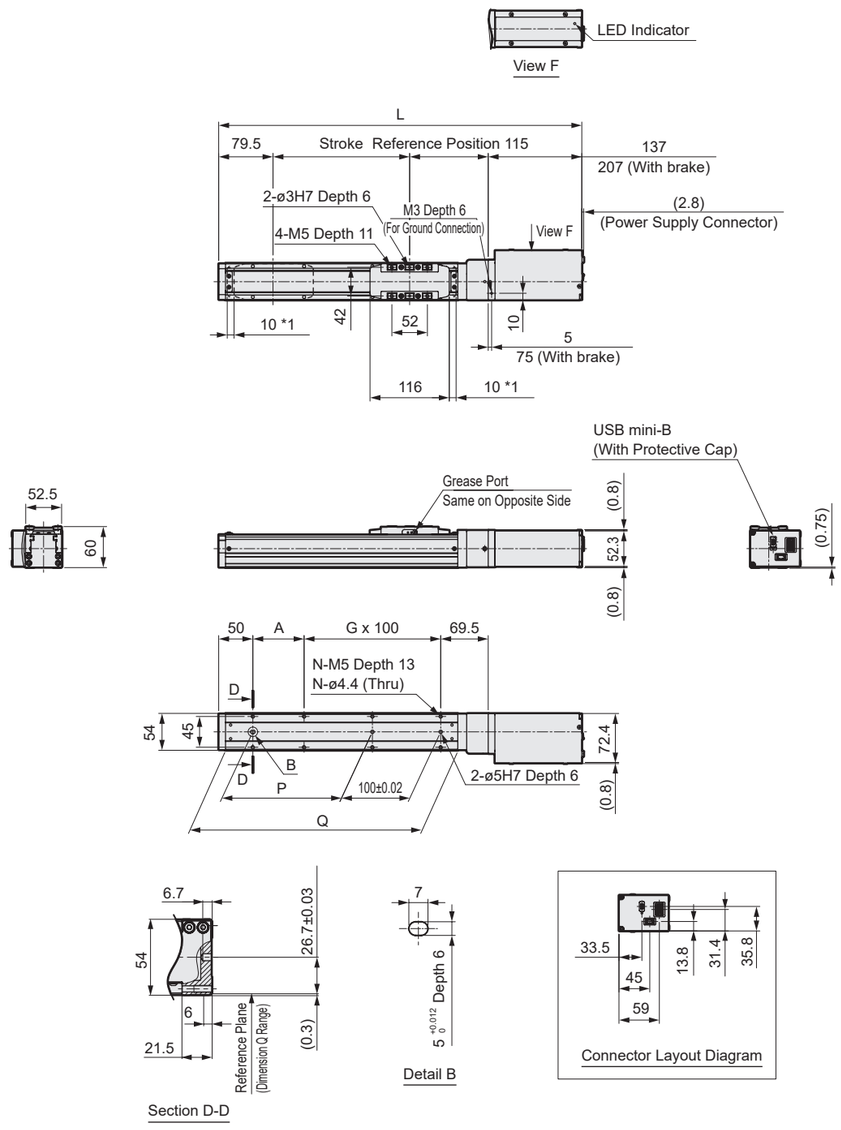

*1: Operating range to the mechanical stopper

Stroke Code		0050	0100	0150	0200	0250	0300	0350	0400	0450	0500	0550	0600
Stroke (mm)		50	100	150	200	250	300	350	400	450	500	550	600
L	Without brake	381.5	431.5	481.5	531.5	581.5	631.5	681.5	731.5	781.5	831.5	881.5	931.5
	With brake	451.5	501.5	551.5	601.5	651.5	701.5	751.5	801.5	851.5	901.5	951.5	1001.5
A		25	75	25	75	25	75	25	75	25	75	25	75
G		1	1	2	2	3	3	4	4	5	5	6	6
N		6	6	8	8	10	10	12	12	14	14	16	16
P		25	75	125	175	225	275	325	375	425	475	525	575
Q		190	240	290	340	390	440	490	540	590	640	690	740
Weight (kg)	Without brake	2.6	2.8	2.9	3.0	3.2	3.3	3.5	3.6	3.7	3.9	4.0	4.2
	With brake	3.4	3.5	3.7	3.8	3.9	4.1	4.2	4.4	4.5	4.6	4.8	4.9

MEMO

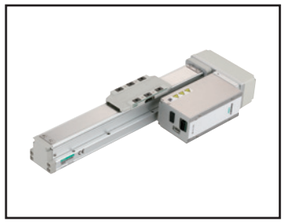

Electric Actuator Slider Type

LRXE-BS-05□

Motor Fold-back Mounting Type

□42 Stepping Motor

CE RoHS

Model No. Notation

LRXE - BS - 05 R 10 0300 N B N - NP N C 00

❶ ❷ ❸ ❹ ❺ ❻ ❼ ❽

❶Size

05	Body Width 54 mm

❷Motor Mounting Direction

R	Right Folded-back Mounting
L	Left Folded-back Mounting

❸Screw Lead

05	5mm
10	10mm
20	20mm

❹Stroke

0050 to 0600	50mm (per 50 mm) 600mm

❺Brake *1

N	Without
B	With

❻Encoder

B	Batteryless Absolute Encoder

❼Interface

NP	Parallel I/O

❽For Movable Cable

00	Without
01	1m
03	3m
05	5m
10	10m

*1 Select "With" for vertical use.

Specifications

Motor		□42 Stepping Motor		
Encoder Type		Batteryless Absolute Encoder		
Driving Method		Ball Screw ø12		
Controller		Built-in		
Stroke mm		50 to 600		
Screw Lead mm		5	10	20
Max. Payload (kg) *1	Horizontal	40.0	27.5	18.3
	Vertical	10.0	3.3	0.8
Operating Speed Range *2 (mm/s)		6 to 325	12 to 635	25 to 1120
Max. Acceleration/ Deceleration (G)	Horizontal	1.0		
	Vertical	0.5		
Max. Pushing Force (N)		220	110	55
Pressing Operation Speed Range (mm/s)		5 to 20		
Repeatability (mm)		±0.01		
Lost Motion (mm)		0.1 or less		
Static Allowable Moment (N·m)		MP: 103 MY: 103 MR: 144		
Setting Tool		Setting Software (S-Tools) Connection Cable: USB Cable (mini-B)		
External Interface	Parallel I/O Specs.	24 VDC ±10% Max. 4 points each for I/O, Cable length Max. 10 m		
Power Supply Voltage *3		24 VDC ±10%		
Current Consumption	Control A	0.12		
	Motive A	4.5		
Brake	Model, Power supply voltage *3	Non-Excitation-Actuated Type, 24 VDC ±10%		
	Power Consumption (W)	6.1		
	Holding Force (N)	168	84	42
Insulation Resistance		10 MΩ or more at 500 VDC		
Withstand Voltage		500 VAC for 1 minute		
Ambient Temperature and Humidity		10 to 40°C (with no freezing) 35 to 80%RH (with no condensation)		
Storage Ambient Temperature and Humidity		-10 to 50°C (with no freezing) 35 to 80%RH (with no condensation)		
Atmosphere		No corrosive gas, explosive gas, or dust		
Protection Structure		IP20		

*1 Payload capacity varies depending on acceleration/deceleration and speed. For details, please refer to P. 23.
*2 Maximum speed may decrease depending on conditions.
*3 If the cable length exceeds 5 m, the power supply voltage must be 24 VDC ±5%., the power supply voltage must be 24 VDC ±5%.

Stroke and Max. Speed

(mm/s)

Screw Lead (mm)	Stroke (mm) 50 to 500	550	600
5	325	300	260
10	635	615	525
20	1120		1050

Speed and Payload

[For Horizontal Installation]

(kg)

Speed (mm/s)	Screw Lead (mm) 5				10				20			
	Acceleration/Deceleration (G)											
	0.3	0.5	0.7	1.0	0.3	0.5	0.7	1.0	0.3	0.5	0.7	1.0
6	40.0	40.0	40.0	40.0								
12	40.0	40.0	40.0	40.0	27.5	25.0	23.3	22.9				
25	40.0	40.0	40.0	40.0	27.5	25.0	23.3	22.9	18.3	11.7	10.0	8.3
100	40.0	40.0	40.0	40.0	27.5	25.0	23.3	22.9	18.3	11.7	10.0	7.5
150	40.0	40.0	40.0	23.3	27.5	20.0	18.3	14.2	15.0	11.7	10.0	6.7
200	40.0	40.0	32.5	18.3	27.5	20.0	18.3	14.2	15.0	11.7	10.0	6.7
250	40.0	40.0	25.8	13.3	27.5	20.0	18.3	12.9	15.0	11.7	8.3	6.3
300	19.2	19.2	19.2		27.5	20.0	18.3	12.9	15.0	11.7	8.3	6.3
325	19.2	19.2	16.7		27.5	20.0	18.3	12.9	15.0	11.7	8.3	6.3
400					27.5	20.0	18.3	12.9	15.0	11.7	8.3	6.3
500					20.4	17.5	15.0	10.8	13.3	10.0	8.3	6.3
600					15.0	13.3	13.3	6.3	13.3	10.0	8.3	6.3
635					4.6	4.6	4.6	3.3	11.3	8.3	6.7	5.0
700									11.3	8.3	6.7	5.0
800									11.3	7.5	6.7	4.2
900									10.0	7.5	6.7	4.2
1000									6.3	6.3	5.0	2.5
1100									6.3	4.2	2.5	1.7
1120									1.3	1.3	1.3	

[For Vertical Installation]

(kg)

Speed (mm/s)	Screw Lead (mm) 5		10		20	
	Acceleration/Deceleration (G)					
	0.3	0.5	0.3	0.5	0.3	0.5
6	10.0	10.0				
12	10.0	10.0	3.3	3.3		
25	10.0	10.0	3.3	3.3	0.8	0.8
200	10.0	10.0	3.3	3.3	0.8	0.8
250	7.5	5.8	3.3	3.3	0.8	0.8
300	3.8	1.7	3.3	3.3	0.8	0.8
325	0.8		3.3	2.9	0.8	0.8
400			3.3	2.9	0.8	0.8
500			2.5	1.7	0.8	0.8
600			0.8	0.8	0.8	0.8
900					0.8	0.8

Pushing Force

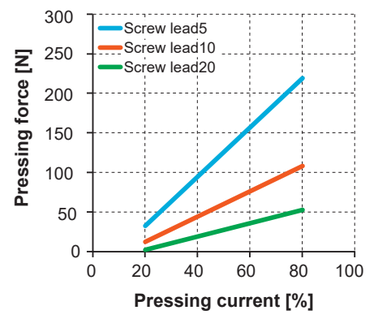

* The thrust force values above are for reference only. They may vary depending on conditions such as the pushing speed.

External Dimensions Drawing: Motor Right Folded-back Mounting

● LRXE-BS-05R

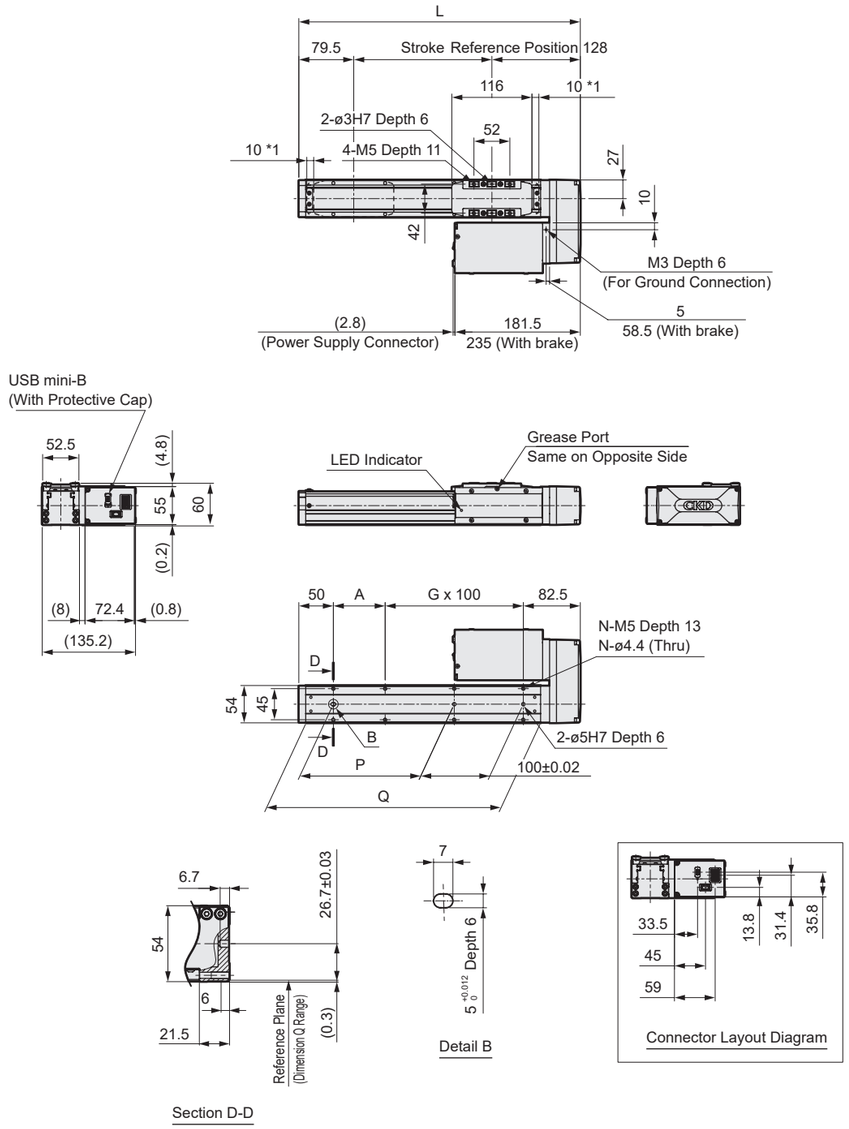

*1: Operating range to the mechanical stopper

Stroke Code		0050	0100	0150	0200	0250	0300	0350	0400	0450	0500	0550	0600
Stroke (mm)		50	100	150	200	250	300	350	400	450	500	550	600
L		257.5	307.5	357.5	407.5	457.5	507.5	557.5	607.5	657.5	707.5	757.5	807.5
A		25	75	25	75	25	75	25	75	25	75	25	75
G		1	1	2	2	3	3	4	4	5	5	6	6
N		6	6	8	8	10	10	12	12	14	14	16	16
P		25	75	125	175	225	275	325	375	425	475	525	575
Q		190	240	290	340	390	440	490	540	590	640	690	740
Weight (kg)	Without brake	2.8	2.9	3.0	3.2	3.3	3.5	3.6	3.7	3.9	4.0	4.1	4.3
	With brake	3.5	3.7	3.8	3.9	4.1	4.2	4.4	4.5	4.6	4.8	4.9	5.1

External Dimensions Drawing: Motor Left Folded-back Mounting

● LRXE-BS-05L

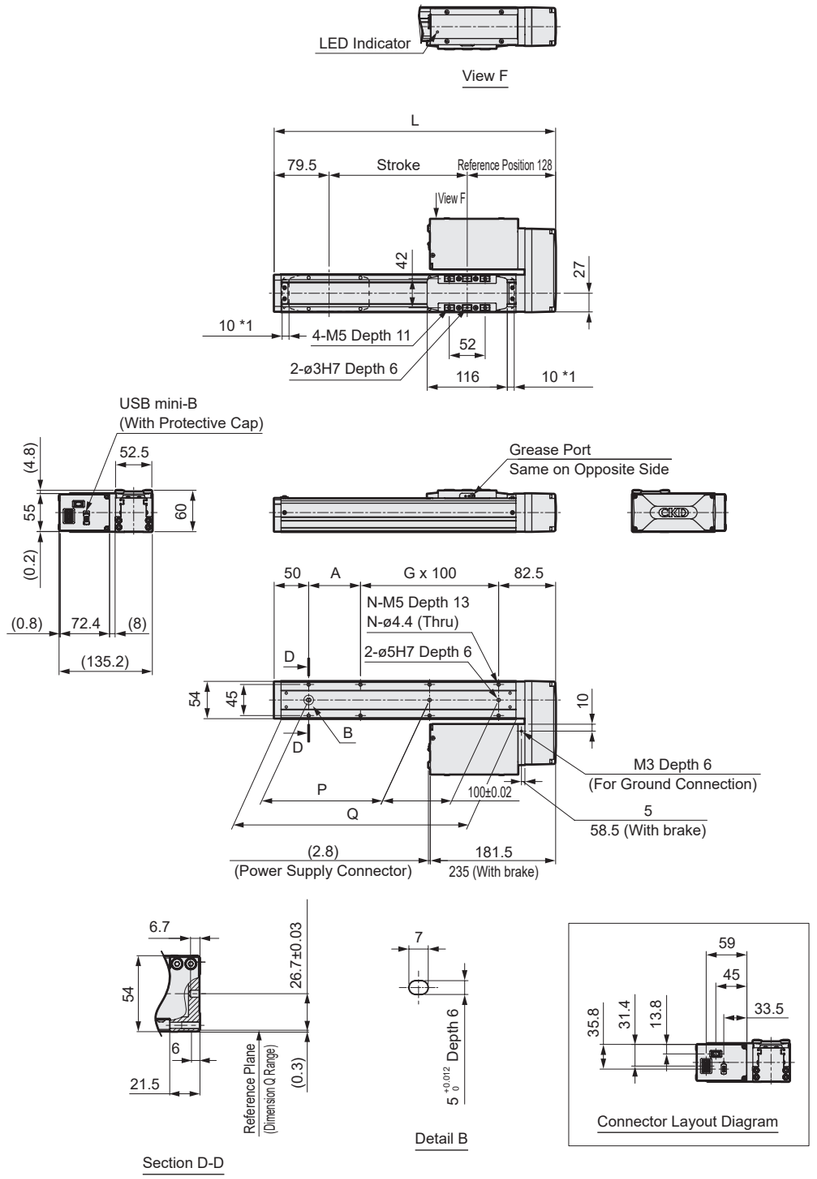

*1: Operating range to the mechanical stopper

Stroke Code		0050	0100	0150	0200	0250	0300	0350	0400	0450	0500	0550	0600
Stroke (mm)		50	100	150	200	250	300	350	400	450	500	550	600
L		257.5	307.5	357.5	407.5	457.5	507.5	557.5	607.5	657.5	707.5	757.5	807.5
A		25	75	25	75	25	75	25	75	25	75	25	75
G		1	1	2	2	3	3	4	4	5	5	6	6
N		6	6	8	8	10	10	12	12	14	14	16	16
P		25	75	125	175	225	275	325	375	425	475	525	575
Q		190	240	290	340	390	440	490	540	590	640	690	740
Weight (kg)	Without brake	2.8	2.9	3.0	3.2	3.3	3.5	3.6	3.7	3.9	4.0	4.1	4.3
	With brake	3.5	3.7	3.8	3.9	4.1	4.2	4.4	4.5	4.6	4.8	4.9	5.1

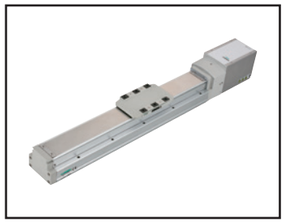

Electric Actuator Slider Type

LRXE-BS-08E

Motor Straight Mounting Type

□56 Stepping Motor

CE RoHS

Model No. Notation

LRXE - BS - 08 E 10 0300 N B N - NP N C 00

❶ ❷ ❸ ❹ ❺ ❻ ❼ ❽ ❾

❶Size

08	Body Width 82 mm

❷Motor Mounting Direction

E	Straight Mounting

❸Screw Lead

05	5mm
10	10mm
20	20mm

❹Stroke

0050 to 0800	50mm (per 50 mm) 800mm

❺Brake *1

N	Without
B	With

❻Encoder

B	Batteryless Absolute Encoder

❼Interface

NP	Parallel I/O

❽Motor Arrangement

N	Standard

❾For Movable Cable

00	Without
01	1m
03	3m
05	5m
10	10m

*1 Select "With" for vertical use.

Specifications

Motor			□56 Stepping Motor	
Encoder Type			Batteryless Absolute Encoder	
Driving Method			Ball Screw ø15	
Controller			Built-in	
Stroke		mm	50 to 800	
Screw Lead		mm	5	10	20
Max. Payload (kg) *1	Horizontal		80.0	70.0	30.0
	Vertical		43.3	28.3	3.3
Operating Speed Range *2		mm/s	6 to 230	12 to 430	25 to 650
Max. Acceleration/ Deceleration (G)	Horizontal		1.0		
	Vertical		0.5		
Max. Pushing Force		N	965	482	241
Pressing Operation Speed Range		mm/s	5 to 20		
Repeatability		mm	±0.01		
Lost Motion		mm	0.1 or less		
Static Allowable Moment		N·m	MP:203 MY:203 MR:336		
Setting Tool			Setting Software (S-Tools) Connection Cable: USB Cable (mini-B)		
External Interface	Parallel I/O Specifications		24 VDC ±10% Max. 4 points each for I/O, Cable length Max. 10 m		
Power Supply Voltage		*3	24 VDC ±10%		
Current Consumption	Control	A	0.12		
	Motive	A	4.5		
Brake	Model, Power supply voltage *3		Non-Excitation-Actuated Type, 24 VDC ±10%		
	Power Consumption	W	7.2		
	Holding Force	N	768	384	192
Insulation Resistance			10 MΩ or more at 500 VDC		
Withstand Voltage			500 VAC for 1 minute		
Ambient Temperature and Humidity			10 to 40°C (with no freezing) 35 to 80%RH (with no condensation)		
Storage Ambient Temperature and Humidity			-10 to 50°C (with no freezing)) 35 to 80%RH (with no condensation)		
Atmosphere			No corrosive gas, explosive gas, or dust		
Protection Structure			IP20		

*1 Payload capacity varies depending on acceleration/deceleration and speed. For details, please refer to P. 27.
*2 Maximum speed may decrease depending on conditions.
*3 If the cable length exceeds 5 m, the power supply voltage must be 24 VDC ±5%., the power supply voltage must be 24 VDC ±5%..

Stroke and Max. Speed

(mm/s)

Screw Lead (mm)	Stroke (mm) 50 to 700	750	800
5	230	220	200
10	430		400
20	650		

Speed and Payload

[For Horizontal Installation]

(kg)

Speed (mm/s)	Screw Lead(mm) 5				10				20			
	Acceleration/Deceleration (G)											
	0.3	0.5	0.7	1.0	0.3	0.5	0.7	1.0	0.3	0.5	0.7	1.0
6	80.0	80.0	80.0	80.0								
12	80.0	80.0	80.0	80.0	70.0	70.0	70.0	70.0				
25	80.0	80.0	80.0	80.0	70.0	70.0	70.0	70.0	30.0	30.0	30.0	30.0
100	80.0	80.0	80.0	80.0	70.0	70.0	70.0	70.0	30.0	30.0	30.0	30.0
150	80.0	80.0	80.0	50.0	70.0	70.0	70.0	70.0	30.0	30.0	26.7	26.7
200	51.0	51.0	51.0	18.3	70.0	70.0	70.0	40.0	30.0	30.0	26.7	26.7
230	18.3	18.3	18.3		70.0	70.0	43.3	40.0	30.0	26.7	26.7	23.0
250					70.0	70.0	43.3	40.0	30.0	26.7	26.7	23.0
300					70.0	51.0	36.0	15.0	30.0	26.7	26.7	23.0
350					36.0	36.0	26.0	3.5	30.0	26.7	26.7	16.0
400					36.0	28.0	18.0		30.0	26.7	23.0	16.0
430					12.5	12.5	12.5		30.0	26.7	23.0	16.0
500									26.7	26.7	16.0	16.0
600									22.5	22.5	16.0	6.5
650									22.5	22.5	8.0	2.5

[For Vertical Installation]

(kg)

Speed (mm/s)	Screw Lead(mm) 5		10		20	
	Acceleration/Deceleration (G)					
	0.3	0.5	0.3	0.5	0.3	0.5
6	43.3	43.3				
12	43.3	43.3	28.3	28.3		
25	43.3	43.3	28.3	28.3	3.3	3.3
50	43.3	43.3	28.3	28.3	3.3	3.3
100	16.7	16.7	24.2	12.1	3.3	3.3
150	16.7	16.7	22.5	12.1	3.3	3.3
200	5.0	5.0	14.2	12.1	3.3	3.3
230	0.8		12.0	12.0	3.3	3.3
250			12.0	12.0	3.3	3.3
300			5.4	2.1	3.3	3.3
350			2.1	2.1	3.3	3.3
400			2.1	2.1	3.3	3.3
500					3.3	3.3
600					0.8	0.8
650					0.8	0.8

Pushing Force

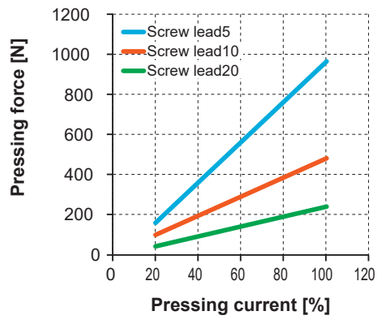

* The Pushing Force values above are for reference. They may vary depending on conditions such as pressing speed.

LRXE-BS-08E

External Dimensions Drawing: Motor Straight / Motor Arrangement Standard

● LRXE-BS-08E-N

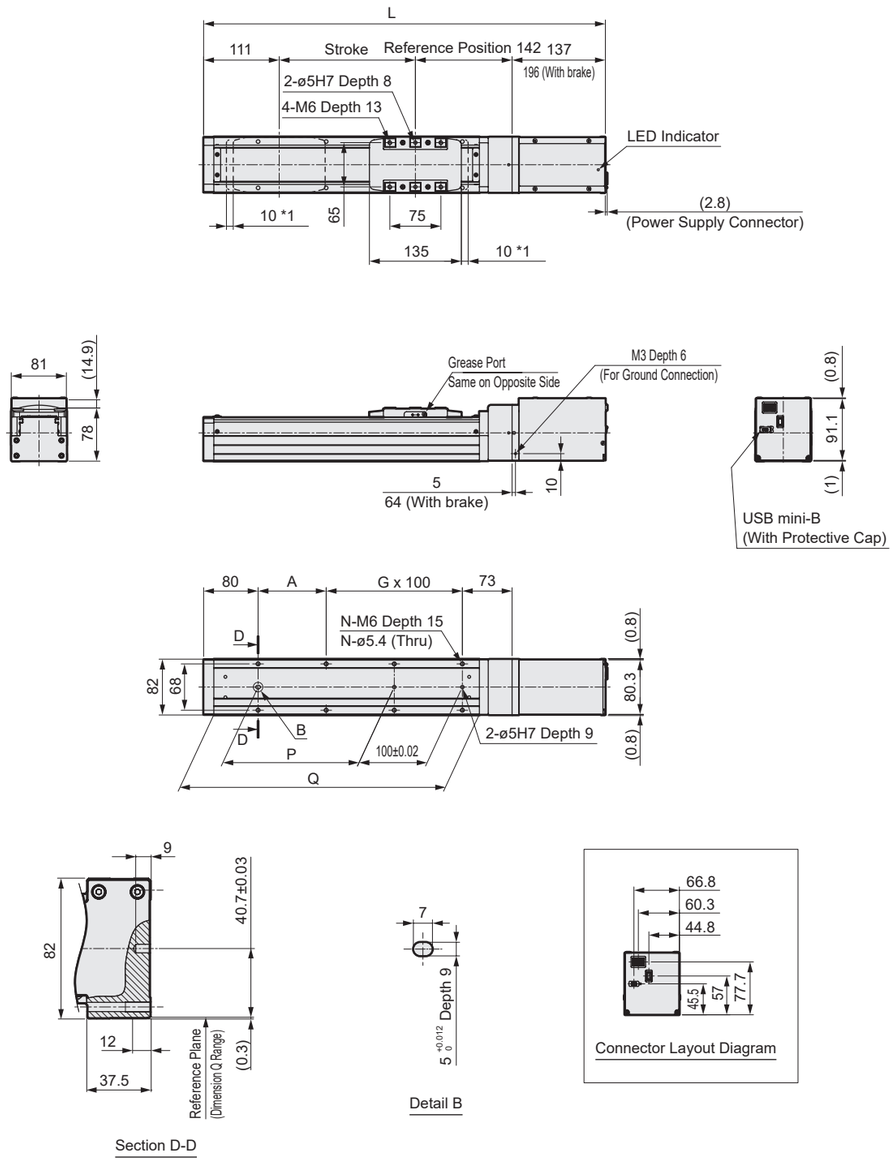

*1: Operating range to the mechanical stopper

Stroke Code		0050	0100	0150	0200	0250	0300	0350	0400	0450	0500	0550	0600	0650	0700	0750	0800
Stroke (mm)		50	100	150	200	250	300	350	400	450	500	550	600	650	700	750	800
L	Without brake	440	490	540	590	640	690	740	790	840	890	940	990	1040	1090	1140	1190
	With brake	499	549	599	649	699	749	799	849	899	949	999	1049	1099	1149	1199	1249
A		150	100	50	100	50	100	50	100	50	100	50	100	50	100	50	100
G		0	1	2	2	3	3	4	4	5	5	6	6	7	7	8	8
N		4	6	8	8	10	10	12	12	14	14	16	16	18	18	20	20
P		50	100	150	200	250	300	350	400	450	500	550	600	650	700	750	800
Q		240	290	340	390	440	490	540	590	640	690	740	790	840	890	940	990
Weight (kg)	Without brake	6.0	6.3	6.7	7.0	7.3	7.7	8.0	8.3	8.7	9.0	9.3	9.7	10.0	10.3	10.7	11.0
	With brake	7.0	7.4	7.7	8.0	8.4	8.7	9.0	9.4	9.7	10.0	10.4	10.7	11.0	11.4	11.7	12.1

MEMO

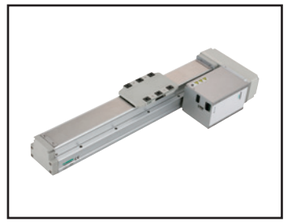

Electric Actuator Slider Type

LRXE-BS-08□

Motor Fold-back Mounting Type

□56 Stepping Motor

CE RoHS

Model No. Notation

LRXE - BS - 08 R 10 0300 N B N - NP N C 00

❶ ❷ ❸ ❹ ❺ ❻ ❼ ❽

❶Size

08	Body Width 82 mm

❷Motor Mounting Direction

R	Right Folded-back Mounting
L	Left Folded-back Mounting

❸Screw Lead

05	5mm
10	10mm
20	20mm

❹Stroke

0050 to 0800	50mm (per 50 mm) 800mm

❺Brake *1

N	Without
B	With

❻Encoder

B	Batteryless Absolute Encoder

❼Interface

NP	Parallel I/O

❽For Movable Cable

00	Without
01	1m
03	3m
05	5m
10	10m

*1 Select "With" for vertical use.

Specifications

Motor			□56 Stepping Motor	
Encoder Type			Batteryless Absolute Encoder	
Driving Method			Ball Screw ø15	
Controller			Built-in	
Stroke		mm	50 to 800	
Screw Lead		mm	5	10	20
Max. Payload (kg) *1		Horizontal	80.0	70.0	30.0
		Vertical	33.3	21.7	3.3
Operating Speed Range *2		mm/s	6 to 200	12 to 430	25 to 650
Max. Acceleration/ Deceleration (G)		Horizontal	1.0		
		Vertical	0.5		
Max. Pushing Force		N	965	482	241
Pressing Operation Speed Range		mm/s	5 to 20		
Repeatability		mm	±0.01		
Lost Motion		mm	0.1 or less		
Static Allowable Moment		N·m	MP:203 MY:203 MR:336		
Setting Tool			Setting Software (S-Tools) Connection Cable: USB Cable (mini-B)		
External Interface	Parallel I/O Specifications		24 VDC ±10% Max. 4 points each for I/O, Cable length Max. 10 m		
Power Supply Voltage		*3	24 VDC ±10%		
Current Consumption	Control	A	0.12		
	Motive	A	4.5		
Brake	Model, Power supply voltage *3		Non-Excitation-Actuated Type, 24 VDC ±10%		
	Power Consumption	W	7.2		
	Holding Force	N	768	384	192
Insulation Resistance			10 MΩ or more at 500 VDC		
Withstand Voltage			500 VAC for 1 minute		
Ambient Temperature and Humidity			10 to 40°C (with no freezing) 35 to 80%RH (with no condensation)		
Storage Ambient Temperature and Humidity			-10 to 50°C (with no freezing)) 35 to 80%RH (with no condensation)		
Atmosphere			No corrosive gas, explosive gas, or dust		
Protection Structure			IP20		

*1 Payload capacity varies depending on acceleration/deceleration and speed. For details, please refer to P. 31.
*2 Maximum speed may decrease depending on conditions.
*3 If the cable length exceeds 5 m, the power supply voltage must be 24 VDC ±5%., the power supply voltage must be 24 VDC ±5%.

Stroke and Max. Speed

(mm/s)

Screw Lead (mm)	Stroke (mm) 50 to 750	800
5	200	
10	430	400
20	650	

Speed and Payload

[For Horizontal Installation]

(kg)

Speed (mm/s)	Screw Lead(mm) 5				10				20			
	Acceleration/Deceleration (G)											
	0.3	0.5	0.7	1.0	0.3	0.5	0.7	1.0	0.3	0.5	0.7	1.0
6	80.0	80.0	80.0	80.0								
12	80.0	80.0	80.0	80.0	70.0	70.0	70.0	70.0				
25	80.0	80.0	80.0	80.0	70.0	70.0	70.0	70.0	30.0	30.0	30.0	30.0
50	80.0	80.0	80.0	80.0	70.0	70.0	70.0	70.0	30.0	30.0	30.0	30.0
100	80.0	80.0	80.0	40.0	70.0	70.0	70.0	70.0	30.0	30.0	30.0	30.0
150	80.0	16.7	16.7	8.8	70.0	70.0	70.0	70.0	30.0	30.0	26.7	26.7
200	51.0	16.7	16.7		70.0	70.0	70.0	40.0	30.0	30.0	26.7	26.7
250					70.0	68.3	43.3	40.0	30.0	26.7	26.7	23.0
300					70.0	51.0	36.0	15.0	30.0	26.7	26.7	23.0
350					36.0	36.0	26.0	3.5	30.0	26.7	26.7	16.0
400					36.0	28.0	18.0		30.0	26.7	23.0	16.0
430					12.5	12.5	12.5		26.5	26.7	23.0	15.8
500									22.5	26.7	16.0	15.8
600									16.7	16.7	16.0	6.6
650									16.7	16.7	8.0	2.5

[For Vertical Installation]

(kg)

Speed (mm/s)	Screw Lead(mm) 5		10		20	
	Acceleration/Deceleration (G)					
	0.3	0.5	0.3	0.5	0.3	0.5
6	33.3	33.3				
12	33.3	33.3	21.7	21.7		
25	33.3	33.3	21.7	21.7	3.3	3.3
50	33.3	33.3	21.7	21.7	3.3	3.3
100	16.7	16.7	21.7	12.1	3.3	3.3
150	8.3	8.3	20.8	12.1	3.3	3.3
200	3.3	3.3	12.5	12.1	3.3	3.3
230			12.0	11.7	3.3	3.3
250			12.0	11.7	3.3	3.3
300			5.4	2.1	3.3	3.3
350			2.1	2.1	3.3	3.3
400			0.8		3.3	3.3
500					3.3	3.3
600					0.8	0.8
650					0.8	0.8

Pushing Force

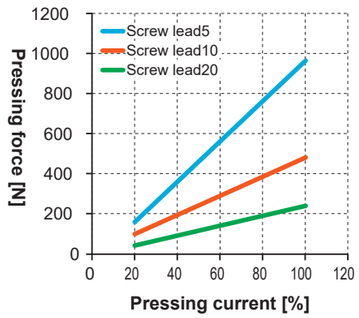

* The thrust force values above are for reference only. They may vary depending on conditions such as the pushing speed.

External Dimensions Drawing: Motor Right Folded-back Mounting

● LRXE-BS-08R

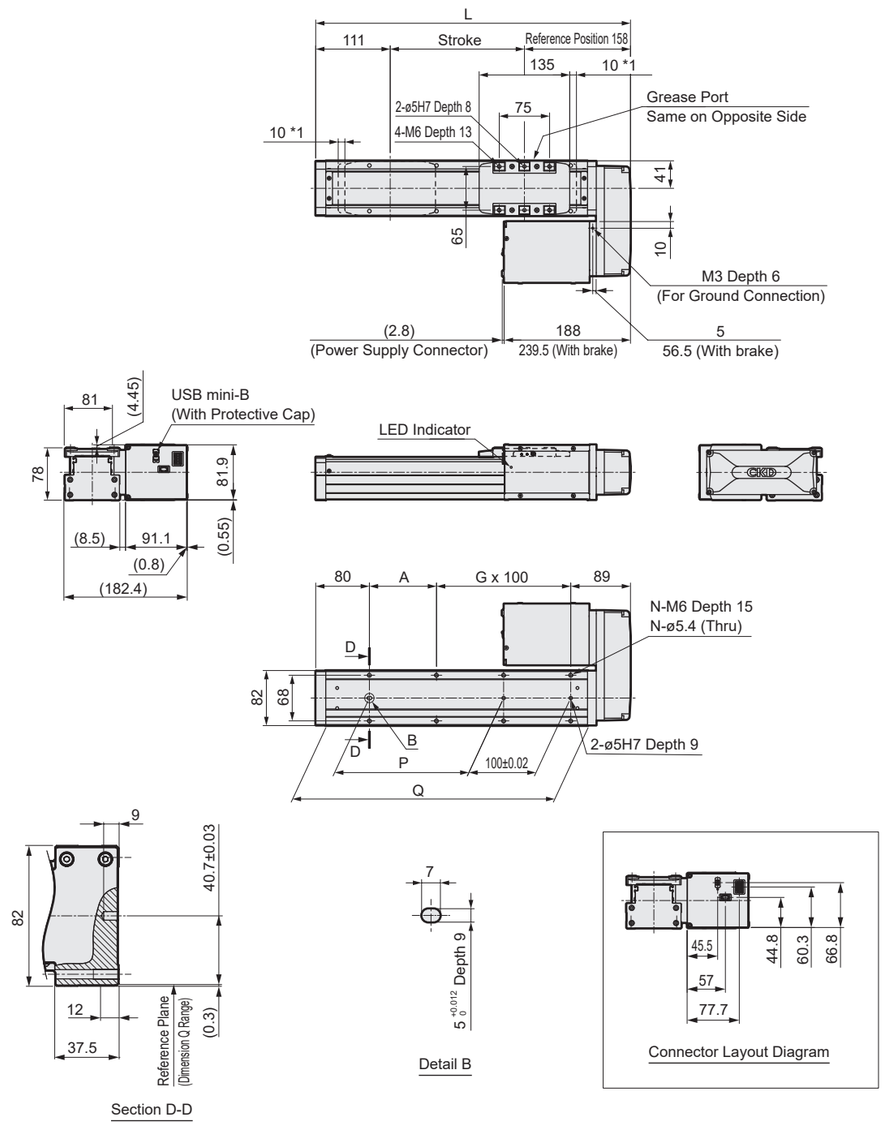

*1: Operating range to the mechanical stopper

Stroke Code		0050	0100	0150	0200	0250	0300	0350	0400	0450	0500	0550	0600	0650	0700	0750	0800
Stroke (mm)		50	100	150	200	250	300	350	400	450	500	550	600	650	700	750	800
L		319	369	419	469	519	569	619	669	719	769	819	869	919	969	1019	1069
A		150	100	50	100	50	100	50	100	50	100	50	100	50	100	50	100
G		0	1	2	2	3	3	4	4	5	5	6	6	7	7	8	8
N		4	6	8	8	10	10	12	12	14	14	16	16	18	18	20	20
P		50	100	150	200	250	300	350	400	450	500	550	600	650	700	750	800
Q		240	290	340	390	440	490	540	590	640	690	740	790	840	890	940	990
Weight (kg)	Without brake	6.2	6.5	6.9	7.2	7.5	7.9	8.2	8.5	8.9	9.2	9.5	9.9	10.2	10.5	10.9	11.2
	With brake	7.2	7.6	7.9	8.2	8.6	8.9	9.2	9.6	9.9	10.2	10.6	10.9	11.2	11.6	11.9	12.3

External Dimensions Drawing: Motor Left Folded-back Mounting

● LRXE-BS-08L

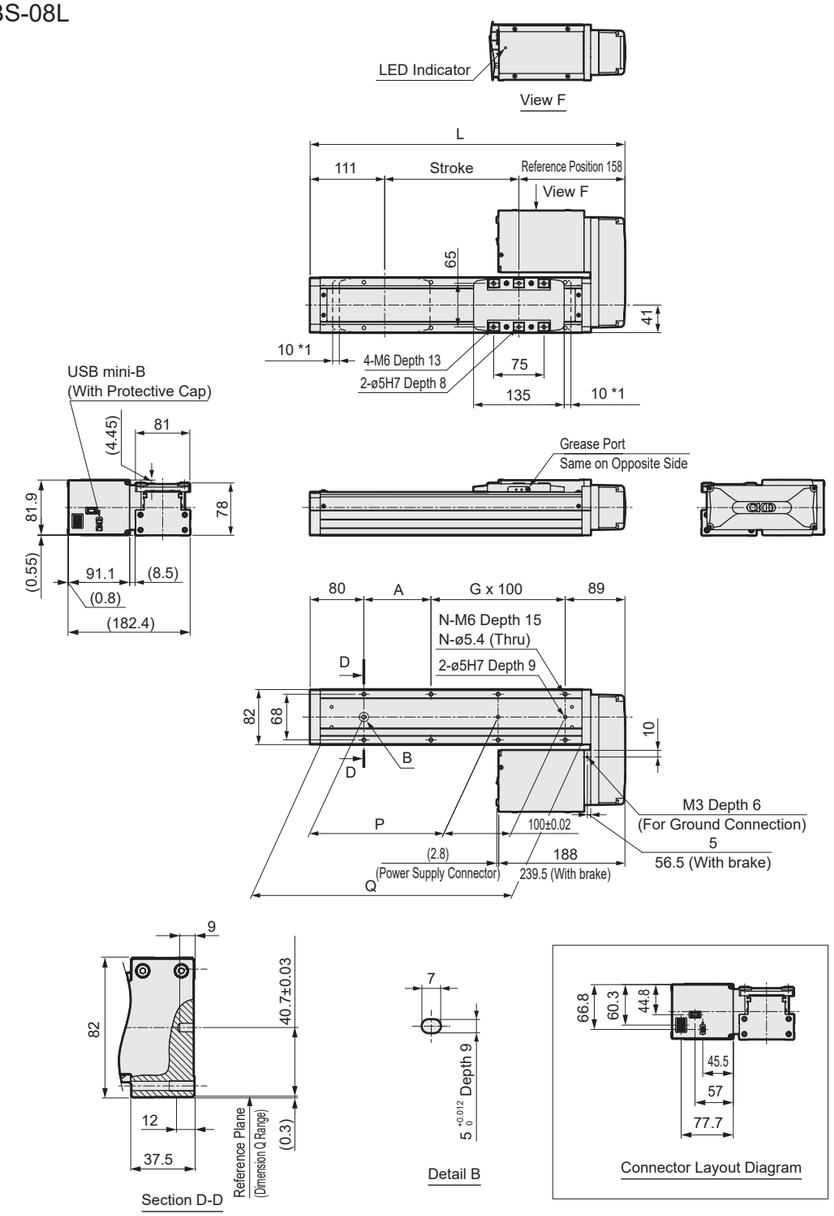

*1: Operating range to the mechanical stopper

Stroke Code		0050	0100	0150	0200	0250	0300	0350	0400	0450	0500	0550	0600	0650	0700	0750	0800
Stroke (mm)		50	100	150	200	250	300	350	400	450	500	550	600	650	700	750	800
L		319	369	419	469	519	569	619	669	719	769	819	869	919	969	1019	1069
A		150	100	50	100	50	100	50	100	50	100	50	100	50	100	50	100
G		0	1	2	2	3	3	4	4	5	5	6	6	7	7	8	8
N		4	6	8	8	10	10	12	12	14	14	16	16	18	18	20	20
P		50	100	150	200	250	300	350	400	450	500	550	600	650	700	750	800
Q		240	290	340	390	440	490	540	590	640	690	740	790	840	890	940	990
Weight (kg)	Without brake	6.2	6.5	6.9	7.2	7.5	7.9	8.2	8.5	8.9	9.2	9.5	9.9	10.2	10.5	10.9	11.2
	With brake	7.2	7.6	7.9	8.2	8.6	8.9	9.2	9.6	9.9	10.2	10.6	10.9	11.2	11.6	11.9	12.3

Model Selection

STEP1 Check Payload Capacity

Payload capacity changes depending on the mounting orientation, screw lead, transport speed, and acceleration/deceleration.Select the size and screw lead by referring to the System Table (P. 4), the specifications table for each model, and the payload capacity table by speed and acceleration/deceleration.

STEP2 Check Positioning Time

Calculate the positioning time for the selected product according to the example below, and check if it meets the required cycle time.

Positioning Time for General Transport Operation

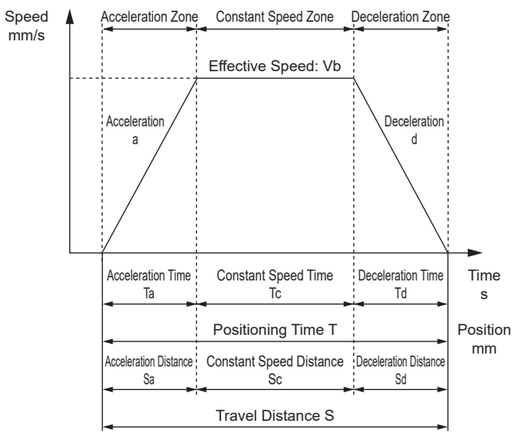

	Contents	Code	Unit	Remarks
Set Value	Set Speed	V	mm/s	
	Set Acceleration	a	mm/s^2	
	Set Deceleration	d	mm/s^2	
	Travel Distance	S	mm	
Calculated Value	Achieved Speed	Vmax	mm/s	$= \{2 \times a \times d \times S / (a + d)\}^{1/2}$
	Effective Speed	Vb	mm/s	The smaller of V and Vmax
	Acceleration Time	Ta	s	=Vb/a
	Deceleration Time	Td	s	=Vb/d
	Constant Speed Time	Tc	s	=Sc/Vb
	Acceleration Distance	Sa	mm	$=(a \times Ta^2)/2$
	Deceleration Distance	Sd	mm	$=(d \times Td^2)/2$
	Constant Speed Distance	Sc	mm	=S-(Sa+Sd)
	Positioning Time	T	s	=Ta+Tc+Td

* Do not use at speeds exceeding the specifications.
* Depending on the acceleration/deceleration and stroke, a trapezoidal velocity profile may not be formed (the set speed may not be reached). In that case, for the effective speed (Vb), choose the lesser of the set speed (V) and the achieved speed (Vmax).
* Acceleration and deceleration vary depending on the product and operating conditions. For details, please refer to the specifications page for each model.
* Settling time varies depending on operating conditions but may take approximately 0.2 s.
* 1 G ≈ 9.8 m/s^2.

Positioning Time for Pushing Operation

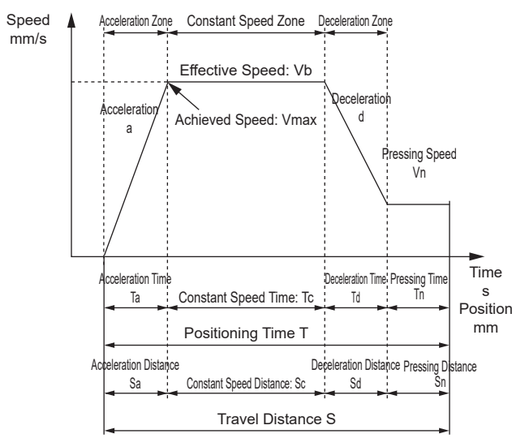

	Contents	Code	Unit	Remarks
Set Value	Set Speed	V	mm/s	
	Set Acceleration	a	mm/s^2	
	Set Deceleration	d	mm/s^2	
	Travel Distance	S	mm	
	Pressing Speed	Vn	mm/s	
	Pressing Distance	Sn	mm	
Calculated Value	Achieved Speed	Vmax	mm/s	$= \{2 \times a \times d \times (S - Sn + Vn^2 / 2 / d) / (a + d)\}^{1/2}$
	Effective Speed	Vb	mm/s	The smaller of V and Vmax
	Acceleration Time	Ta	s	=Vb/a
	Deceleration Time	Td	s	=(Vb-Vn)/d
	Constant Speed Time	Tc	s	=Sc/Vb
	Pressing Time	Tn	s	=Sn/Vn
	Acceleration Distance	Sa	mm	$=(a \times Ta^2)/2$
	Deceleration Distance	Sd	mm	=((Vb+Vn)xTd)/2
	Constant Speed Distance	Sc	mm	=S-(Sa+Sd+Sn)
	Positioning Time	T	s	=Ta+Tc+Td+Tn

* Do not use at speeds exceeding the specifications.
* The pressing speed varies by product.
* Depending on the acceleration/deceleration and stroke In that case
* Acceleration/deceleration varies depending on the product and operating conditions. For details, refer to the specifications page for each model.
* Settling time varies depending on operating conditions but may take approximately 0.2 s.
* 1 G ≈ 9.8 m/s^2.

STEP3 Check Allowable Overhang Length

Confirm that the overhang length of the load during operation is within the allowable range (P. 36-38). For details on selection, please contact our sales representative.

Allowable Overhang Length (LRXE Series)

[For Horizontal Installation]

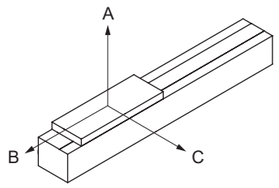

[Allowable Overhang Length]

● LRXE-BS-04□

Motor Mounting	Acceleration/Deceleration G	Screw Lead	Load Weight kg	Max. Speed mm/s	Overhang (mm) A	B	C
Straight	0.3	6	10	450	390	70	90
			15	400	270	45	55
			20	400	185	30	40
		12	5	800	480	130	135
			10	700	245	60	65
			15	400	270	45	55
	1.0	6	9	400	205	80	90
			12	350	160	60	70
			16	100	295	60	85
		12	1	850	800	680	615
			3	700	415	230	220
			5	700	230	135	120

● LRXE-BS-05□

Motor Mounting	Acceleration/Deceleration G	Screw Lead	Load Weight kg	Max. Speed mm/s	Overhang (mm) A	B	C
Straight	0.3	5	20	375	345	55	65
			30	350	220	30	40
			40	350	140	20	25
		10	6	700	745	180	195
			15	600	300	65	75
			27	400	215	35	40
		20	6	1100	495	160	145
			13	600	355	80	90
			18	200	735	70	95
	1.0	5	20	250	205	55	70
			30	200	160	35	45
			40	100	125	30	45
		10	10	500	240	110	115
			15	100	560	105	145
			20	100	385	75	105
		20	2	1000	730	510	405
			5	700	385	220	200
			7	100	1000	205	285

● LRXE-BS-08□

Motor Mounting	Acceleration/Deceleration G	Screw Lead	Load Weight kg	Max. Speed mm/s	Overhang (mm) A	B	C
Straight	0.3	5	40	200	1000	95	155
			60	200	635	60	95
			80	150	450	40	65
		10	30	400	715	115	165
			50	300	515	65	100
			70	300	340	40	65
		20	10	650	1000	335	420
			20	650	645	160	195
			30	400	575	110	150
	1.0	5	40	150	580	105	165
			60	100	370	70	115
			80	100	235	50	80
		10	30	250	465	125	180
			50	150	450	80	130
			70	150	295	55	85
		20	10	500	600	335	340
			20	300	480	180	235
			30	100	915	160	260

* Value is based on an actuator running life of 5,000 km.
* Load is for a single overhang direction only.
* Dimensions A, B, and C are from the center of the top table surface.
* Values are for a stroke of 350 mm at the maximum speed for each respective payload capacity.
* Values may differ depending on the motor mounting direction.
* For acceleration/deceleration and payload capacity, please refer to the payload capacity table by speed and acceleration/deceleration (on the specifications page for each model).

Allowable Overhang Length (LRXE Series)

[Wall Mounting]

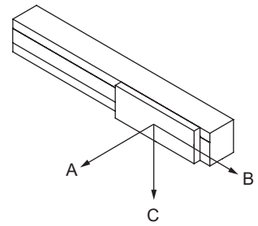

[Allowable Overhang Length]

● LRXE-BS-04□

Motor Mounting	Acceleration/Deceleration G	Screw Lead	Load Weight kg	Max. Speed mm/s	Overhang (mm) A	B	C
Straight	0.3	6	5	450	160	120	760
			10	450	55	40	290
			15	400	20	15	155
		12	5	800	105	95	390
			10	700	35	30	145
			15	400	20	15	155
	1.0	6	9	400	60	50	170
			12	350	40	30	125
			16	100	45	30	325
		12	1	850	595	645	800
			3	700	200	200	385
			5	700	100	100	200

● LRXE-BS-05□

Motor Mounting	Acceleration/Deceleration G	Screw Lead	Load Weight kg	Max. Speed mm/s	Overhang (mm) A	B	C
Straight	0.3	5	5	375	280	215	1000
			10	375	110	85	650
			20	375	25	15	190
		10	6	700	160	140	630
			10	600	80	70	370
			15	600	35	30	170
		20	6	1100	110	110	380
			13	600	50	40	235
			18	200	50	35	580
	1.0	5	5	375	260	215	675
			10	300	110	90	360
			20	250	30	20	150
		10	10	500	80	75	205
			15	100	100	70	615
			20	100	55	40	440
		20	2	1000	380	465	700
			5	700	175	180	350
			7	100	240	170	1000

● LRXE-BS-08□

Motor Mounting	Acceleration/Deceleration G	Screw Lead	Load Weight kg	Max. Speed mm/s	Overhang (mm) A	B	C
Straight	0.3	5	40	200	105	65	880
			60	200	45	25	480
			80	150	15	10	240
		10	30	400	120	80	600
			50	300	55	35	380
			70	300	15	10	165
		20	10	650	380	295	1000
			20	650	155	120	540
			30	400	105	75	460
	1.0	5	40	150	120	75	535
			50	150	80	50	400
			80	100	30	20	305
		10	30	250	140	90	425
			50	150	80	50	400
			70	150	35	20	235
		20	10	500	315	295	570
			20	300	195	145	445
			30	100	210	125	1000

* Value is based on an actuator running life of 5,000 km.
* Load is for a single overhang direction only.
* Dimensions A, B, and C are from the center of the top table surface.
* Values are for a stroke of 350 mm at the maximum speed for each respective payload capacity.
* Values may differ depending on the motor mounting direction.
* For acceleration/deceleration and payload capacity, please refer to the payload capacity table by speed and acceleration/deceleration (on the specifications page for each model).

Allowable Overhang Length (LRXE Series)

[For Vertical Installation]

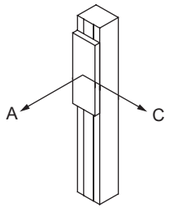

[Allowable Overhang Length]

● LRXE-BS-04□

Motor Mounting	Acceleration / Deceleration G	Screw Lead	Load Weight kg	Max. Speed mm/s	Overhang (mm) A	Overhang (mm) C
Straight	0.3	6	3	300	240	235
			6	250	100	100
			7	200	60	60
		12	1	600	690	635
			2	600	325	300
			3	500	215	200
	0.5	6	3	300	240	235
			6	200	100	100
			7	200	60	60
		12	1	600	680	625
			2	600	320	295
			3	500	210	200

● LRXE-BS-05□

Motor Mounting	Acceleration / Deceleration G	Screw Lead	Load Weight kg	Max. Speed mm/s	Overhang (mm) A	Overhang (mm) C
Straight	0.3	5	6	300	175	170
			10	250	90	90
			14	100	75	75
		10	2	500	565	535
			4	400	275	265
			7	300	145	140
		20	0.5	900	1000	1000
			1	800	1000	895
			2.5	400	470	450
	0.5	5	6	300	175	170
			10	150	90	85
			14	100	75	75
		10	2	400	590	570
			4	300	290	280
			7	300	145	140
		20	0.5	900	1000	1000
			1	800	985	870
			2.5	400	465	445

● LRXE-BS-08□

Motor Mounting	Acceleration / Deceleration G	Screw Lead	Load Weight kg	Max. Speed mm/s	Overhang (mm) A	Overhang (mm) C
Straight	0.3	5	15	150	270	265
			30	50	135	135
			43	50	80	80
		10	13	200	265	265
			20	150	185	185
			28	50	150	150
		20	0.8	600	1000	1000
			2	500	1000	1000
			3	300	1000	1000
	0.5	5	15	150	270	265
			30	50	135	135
			43	50	80	80
		10	12	250	290	290
			20	50	230	230
			28	50	150	150
		20	0.8	600	1000	1000
			2	500	1000	1000
			3	300	1000	1000

* Value is based on an actuator running life of 5,000 km.
* Load is for a single overhang direction only.
* Dimensions A, B, and C are from the center of the top table surface.
* Values are for a stroke of 350 mm at the maximum speed for each respective payload capacity.
* Values may differ depending on the motor mounting direction.
* For acceleration/deceleration and payload capacity, please refer to the payload capacity table by speed and acceleration/deceleration (on the specifications page for each model).

Slider Parallelism (Reference Value)

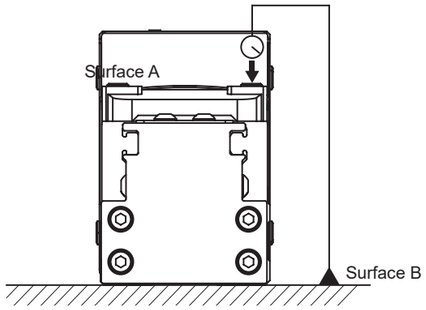

(mm)

	Parallelism Surface A with respect to Surface B
LRXE-BS-04 Series	0.03
LRXE-BS-05 Series	
LRXE-BS-08 Series	

* Parallelism when the product is fixed to a surface plate.

Table Displacement (Reference Value)

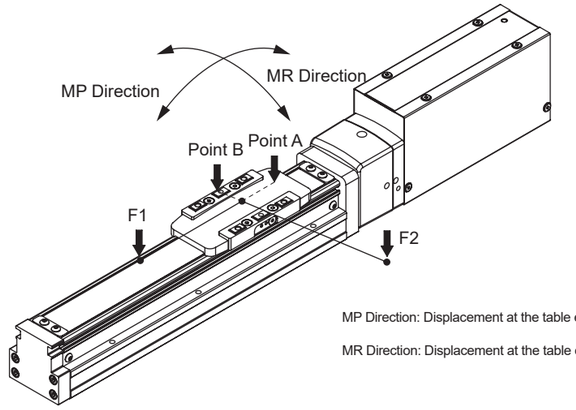

MP Direction: Displacement at the table edge (Point A) when a load (F1) is applied at a position 100 mm from the table center.

MR Direction: Displacement at the table edge (Point B) when a load (F2) is applied at a position 100 mm from the table center.

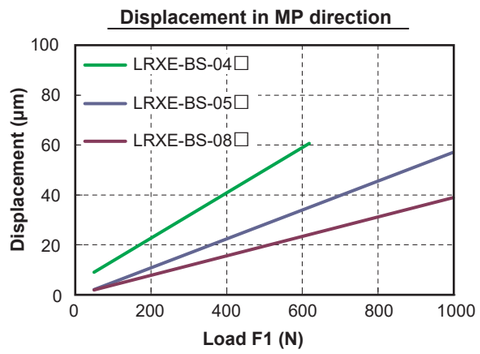

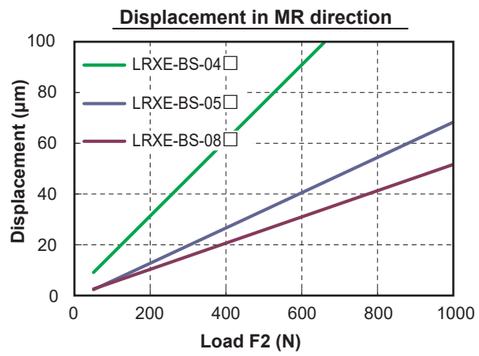

Maintenance Parts

■ Maintenance Parts / Motor Mounting Direction: For Right, Bottom, Left Fold-back (Timing Belt)

Model Number	Applicable Models
EJSG-04R-BELT	LRXE-BS-04R/L
EJSG-05R-BELT	LRXE-BS-05R/L
EJSG-08R-BELT	LRXE-BS-08R/L

■ Maintenance Parts (Steel Belt)

Model Number	Applicable Models
EJSG-04-STEELBELT (4-digit stroke code)	LRXE-BS-04 (Applicable Stroke Product)
EJSG-05-STEELBELT (4-digit stroke code)	LRXE-BS-05 (Applicable Stroke Product)
EJSG-08-STEELBELT (4-digit stroke code)	LRXE-BS-08 (Applicable Stroke Product)

MEMO

LRXG-STG

Guided Type

Electric Actuator with Built-in Controller

CONTENTS

Product Introduction — Opening Section
● **Specifications/Model No. Notation/Dimensions**
- LRXG-STG-M-20 — 44
- LRXG-STG-M-32 — 46
- LRXG-STG-M-50 — 48

● **Model Selection** — 50
⚠ Precautions for Use — 62
Model Selection Checklist — 67

LRXG-STG System Chart

Actuator Model No.	Motor Size	Screw Lead (mm)	Max. Payload (kg)		Stroke (mm) and Max. Speed (mm/s)					Max. Pushing Force (N)
			Horizontal	Vertical	20	25	50	75	100	
LRXG-STG-M-20	□35	6	4.4	6.4	250		250			100
		9	3.2	4	400		400	300		70
LRXG-STG-M-32	□42	6	9	11.6		250				220
		12	4.8	4.8		500				90
LRXG-STG-M-50	□56	6	14.8	19.6		250		200		590
		12	14.8	13.2		400		350		425

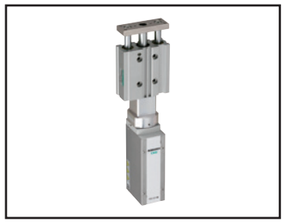

Electric Actuator Guided Type

LRXG-STG-M-20

□35 Stepping Motor

Model No. Notation

LRXG - STG - M - 20 E - 06 020 N B N - NP N C 00

❶Bearing Type

M	Slide Bearing

❷Size

20	20

❸Motor Mounting Direction

E	Straight Mounting

❹Screw Lead

06	6mm
09	9mm

❺Stroke

020	20mm
050	50mm
075	75mm
100	100mm

❻Brake

N	Without
B	With

❼Encoder

B	Batteryless Absolute Encoder

❽Interface

NP	Parallel I/O

❾For Movable Cable

00	Without
01	1m
03	3m
05	5m
10	10m

Specifications

Motor		□35 Stepping Motor	
Encoder Type		Batteryless Absolute Encoder	
Driving Method		Slide Screw ø6	
Controller		Built-in	
Stroke	mm	20 to 100	
Screw Lead	mm	6	9
Max. Payload (kg) *1	Horizontal	4.4	3.2
	Vertical	6.4	4.0
Pressing Operation Speed Range	mm/s	10~250	12~400
Max. Acceleration/ Deceleration G	Horizontal	0.7	
	Vertical	0.3	
Max. Pushing Force	N	100	70
Pressing Operation Speed Range	mm/s	10~20	12~20
Repeatability	mm	±0.02	
Lost Motion	mm	0.3 or less	
Setting Tool		Setting Software (S-Tools) Connection Cable: USB Cable (mini-B)	
External Interface	Parallel I/OSpecifications	24 VDC ±10% Max. 4 points each for I/O, Cable length Max. 10 m	
Power Supply Voltage	*3	24 VDC ±10%	
Current Consumption	Control A	0.12	
	Motive A	1.8	
Brake	Model, Power supply voltage*3	Non-Excitation-Actuated Type, 24 VDC ±10%	
	Power Consumption W	6.1	
	Holding Force N	140	93
Insulation Resistance		10 MΩ or more at 500 VDC	
Withstand Voltage		500 VAC for 1 minute	
Ambient Temperature and Humidity		0 to 40°C (with no freezing) 35 to 80%RH (with no condensation)	
Storage Ambient Temperature and Humidity		-10 to 50°C (with no freezing) 35 to 80%RH (with no condensation)	
Atmosphere		No corrosive gas, explosive gas, or dust	
Protection Structure		IP20	

*1 Payload capacity varies depending on acceleration/deceleration and speed.
*2 Maximum speed may decrease depending on conditions.
*3 If the cable length exceeds 5 m, the power supply voltage must be 24 VDC ±5%.
*4 Due to backlash, if stopping accuracy is required, please use an external stopper, etc., and complete the positioning with a pushing operation.

Speed and Payload

[For Horizontal Installation] (kg)

Speed (mm/s)	Screw Lead 6mm, Acceleration/Deceleration 0.3/0.7 G, Stroke (mm) 50 or less	6mm, 100 or less	9mm, 50 or less	9mm, 100 or less
10	0.8	0.3		
12	0.8	0.3	1.5	1.1
50	4.4	3.9	3.2	2.0
70	4.4	3.9	3.2	2.7
100	4.4	3.9	3.2	2.7
150	4.4	3.9	3.2	2.7
200	2.0	1.5	3.2	2.7
250	2.0	1.5	2.4	1.9
300			0.4	1.9
350			0.4	
400			0.4	

[For Vertical Installation] (kg)

Speed (mm/s)	Screw Lead 6mm, Acceleration/Deceleration 0.3 G, Stroke (mm) 50 or less	6mm, 100 or less	9mm, 50 or less	9mm, 100 or less
10	6.4	5.9		
12	6.4	5.9	4.0	3.5
50	6.4	5.9	4.0	3.5
70	4.0	3.5	4.0	3.5
100	4.0	3.5	4.0	3.5
150	1.6	1.1	3.2	2.7
200	0.8	0.3	3.0	2.7
250			0.8	0.3
300			0.8	0.3
350			0.4	

* Value under the condition that no moment is applied to the end plate section. For details such as the flatness of the mounting surface, please refer to the instruction manual.

Pushing Force

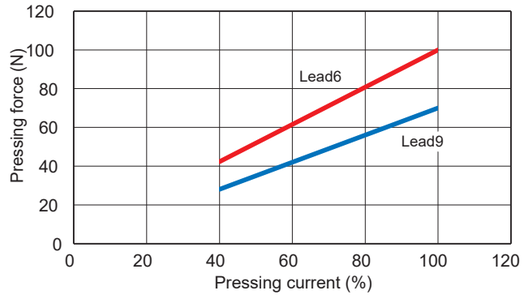

* The upper thrust force values are for reference only. They may vary depending on conditions such as the pushing speed.

Dimensions

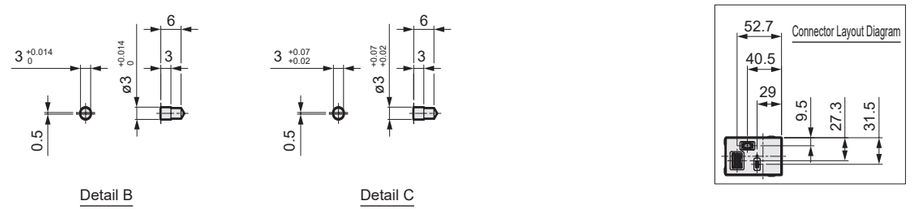

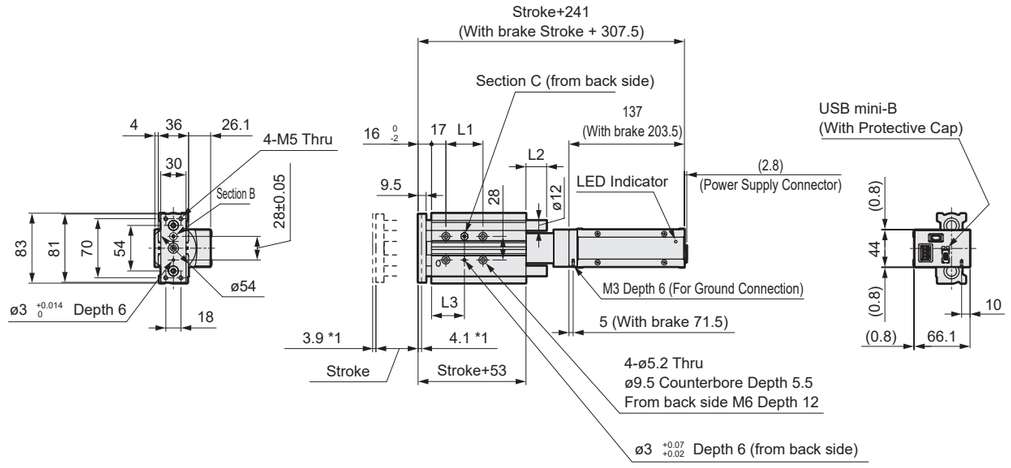

*1: Operating range to the mechanical stopper

Stroke Code		020	050	075	100
Stroke (mm)		20	50	75	100
L1		24	44	44	44
L2		0	0	24.5	24.5
L3		29	39	39	39
Weight (kg)	Without brake	1.4	1.6	1.9	2.1
	With brake	1.8	2.1	2.3	2.5

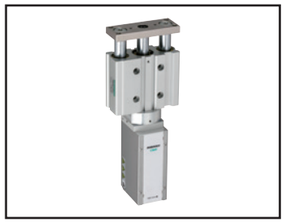

Electric Actuator Guided Type

LRXG-STG-M-32

□42 Stepping Motor

CE RoHS

Model No. Notation

LRXG - STG - M - 32 E - 06 25 N B N - NP N C 00

❶ ❷ ❸ ❹ ❺ ❻ ❼ ❽ ❾

❶Bearing Type

M	Slide Bearing

❷Size

32	32

❸Motor Mounting Direction

E	Straight Mounting

❹Screw Lead

06	6mm
12	12mm

❺Stroke

025	25mm
050	50mm
075	75mm
100	100mm

❻Brake

N	Without
B	With

❼Encoder

B	Batteryless Absolute Encoder

❽Interface

NP	Parallel I/O

❾For Movable Cable

00	Without
01	1m
03	3m
05	5m
10	10m

Specifications

Motor		□42 Stepping Motor	
Encoder Type		Batteryless Absolute Encoder	
Driving Method		Slide Screw ø8	
Controller		Built-in	
Stroke	mm	25 to 100	
Screw Lead	mm	6	12
Max. Payload (kg) *1	Horizontal	9	4.8
	Vertical	11.6	4.8
Pressing Operation Speed Range	mm/s	10~250	15~500
Max. Acceleration/ Deceleration G	Horizontal	0.7	
	Vertical	0.3	
Max. Pushing Force	N	220	90
Pressing Operation Speed Range	mm/s	10~20	15~20
Repeatability	mm	±0.02	
Lost Motion	mm	0.3 or less	
Setting Tool		Setting Software (S-Tools) Connection Cable: USB Cable (mini-B)	
External Interface	Parallel I/O Specs.	24 VDC ±10% Max. 4 points each for I/O, Cable length Max. 10 m	
Power Supply Voltage	*3	24 VDC ±10%	
Current Consumption	Control A	0.12	
	Motive A	2.0	
Brake	Model, Power supply voltage *3	Non-Excitation-Actuated Type, 24 VDC ±10%	
	Power Consumption W	6.1	
	Holding Force N	140	70
Insulation Resistance		10 MΩ or more at 500 VDC	
Withstand Voltage		500 VAC for 1 minute	
Ambient Temperature and Humidity		0 to 40°C (with no freezing) 35 to 80%RH (with no condensation)	
Storage Ambient Temperature and Humidity		-10 to 50°C (with no freezing) 35 to 80%RH (with no condensation)	
Atmosphere		No corrosive gas, explosive gas, or dust	
Protection Structure		IP20	

*1 Payload capacity varies depending on acceleration/deceleration and speed.
*2 Maximum speed may decrease depending on conditions.
*3 If the cable length exceeds 5 m, the power supply voltage must be 24 VDC ±5%., the power supply voltage should be 24 V ±5%.
*4 Due to backlash, if stopping accuracy is required, please use an external stopper, etc., and complete the positioning with a pushing operation.

Speed and Payload

[For Horizontal Installation] (kg)

Speed (mm/s)	Screw Lead 6mm, Acceleration/Deceleration 0.3 G/0.7G, Stroke (mm) 50 or less	100 or less	Screw Lead 12mm, Acceleration/Deceleration 0.3 G/0.7G, Stroke (mm) 50 or less	100 or less
10	1.6	1.1		
15	1.6	1.1	1.2	0.7
50	6.8	6.3	4.8	4.3
70	6.8	6.3	4.8	4.3
100	9.0	8.7	4.8	4.3
150	6.8	6.3	3.6	3.1
200	2.8	2.3	3.6	3.1
250	0.8	0.3	3.6	3.1
300			3.6	3.1
350			1.6	1.1
400			1.6	1.1
500			0.8	0.3

[For Vertical Installation] (kg)

Speed (mm/s)	Screw Lead 6mm, Acceleration/Deceleration 0.3 G, Stroke (mm) 50 or less	100 or less	Screw Lead 12mm, Acceleration/Deceleration 0.3 G, Stroke (mm) 50 or less	100 or less
10	8.8	8.3		
15	8.8	8.3	4.4	3.9
50	11.6	11.1	4.8	4.3
70	5.2	4.7	4.8	4.3
100	5.2	4.7	4.8	4.3
150	2.0	1.5	4.8	4.3
200	0.8	0.3	4.5	4.3
250			1.2	0.7
300			1.2	0.7

* This is the value when no moment is applied to the end plate. For details such as the flatness of the mounting surface, please refer to the instruction manual.

Pushing Force

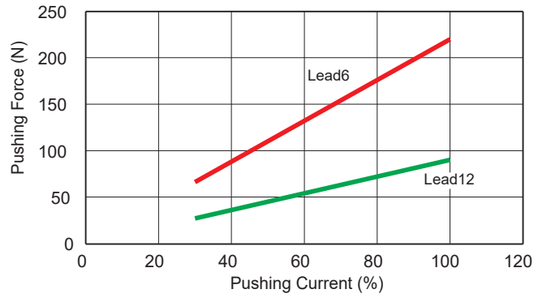

* The upper thrust force values are for reference only. They may vary depending on conditions such as the pushing speed.

Dimensions

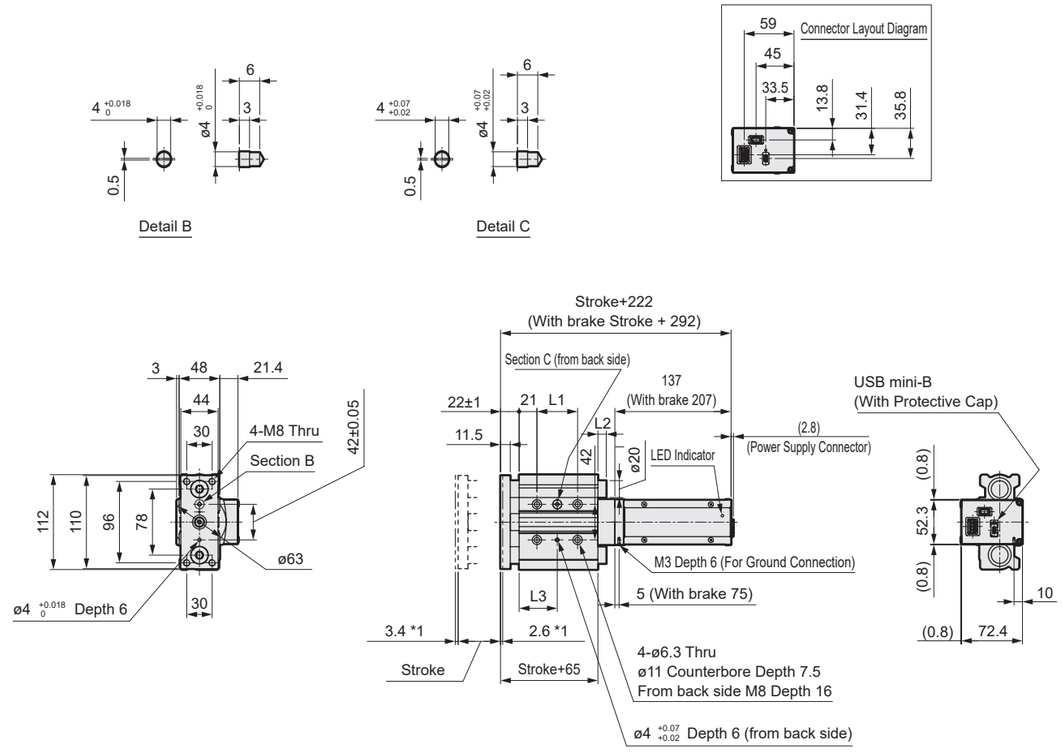

*1: Operating range to the mechanical stopper

Stroke Code		025	050	075	100
Stroke (mm)		25	50	75	100
L1		24	48	48	48
L2		13.5	13.5	34.5	34.5
L3		33	45	45	45
Weight (kg)	Without brake	2.8	3.2	3.7	4.0
	With brake	3.4	3.8	4.3	4.6

Electric Actuator Guided Type

LRXG-STG-M-50

□56 Stepping Motor

Model No. Notation

LRXG - STG - M - 50 E - 06 25 N B N - NP N C 00

❶Bearing Type

M	Slide Bearing

❷Size

50	50

❸Motor Mounting Direction

E	Straight Mounting

❹Screw Lead

06	6mm
12	12mm

❺Stroke

025	25mm
050	50mm
075	75mm
100	100mm

❻Brake

N	Without
B	With

❼Encoder

B	Batteryless Absolute Encoder

❽Interface

NP	Parallel I/O

❾For Movable Cable

00	Without
01	1m
03	3m
05	5m
10	10m

Specifications

Motor		□56 Stepping Motor	
Encoder Type		Batteryless Absolute Encoder	
Driving Method		Slide Screw ø12	
Controller		Built-in	
Stroke	mm	25 to 100	
Screw Lead	mm	6	12
Max. Payload (kg) *1	Horizontal	14.8	14.8
	Vertical	19.6	13.2
Pressing Operation Speed Range	mm/s	20~250	20~500
Max. Acceleration/ Deceleration G	Horizontal	0.7	
	Vertical	0.3	
Max. Pushing Force	N	590	425
Pressing Operation Speed Range	mm/s	20	
Repeatability	mm	±0.02	
Lost Motion	mm	0.3 or less	
Setting Tool		Setting Software (S-Tools) Connection Cable: USB Cable (mini-B)	
External Interface	Parallel I/OSpecifications	24 VDC ±10% Max. 4 points each for I/O, Cable length Max. 10 m	
Power Supply Voltage	*3	24 VDC ±10%	
Current Consumption	Control A	0.12	
	Motive A	3.1	
Brake	Model, Power supply voltage *3	Non-Excitation-Actuated Type, 24 VDC ±10%	
	Power Consumption W	7.2	
	Holding Force N	640	320
Insulation Resistance		10 MΩ or more at 500 VDC	
Withstand Voltage		500 VAC for 1 minute	
Ambient Temperature and Humidity		0 to 40°C (with no freezing) 35 to 80%RH (with no condensation)	
Storage Ambient Temperature and Humidity		-10 to 50°C (with no freezing) 35 to 80%RH (with no condensation)	
Atmosphere		No corrosive gas, explosive gas, or dust	
Protection Structure		IP20	

*1 Payload capacity varies depending on acceleration/deceleration and speed.
*2 Maximum speed may decrease depending on conditions.
*3 If the cable length exceeds 5 m, the power supply voltage must be 24 VDC ±5%., the power supply voltage should be 24 V ±5%.
*4 Due to backlash, if stopping accuracy is required, please use an external stopper, etc., and complete the positioning with a pushing operation.

Speed and Payload

[For Horizontal Installation] (kg)

Speed (mm/s)	Screw Lead 6mm, Acceleration/Deceleration 0.3 G/0.7G, Stroke (mm) 50 or less	100 or less	12mm, 50 or less	100 or less
20	14.8	12.8	4.4	2.4
50	9.6	7.6	9.6	7.6
70	9.6	7.6	9.6	7.6
100	9.6	7.6	14.8	12.8
150	6.0	4.0	10.8	8.8
200	4.0	2.0	10.8	8.8
250	0.4		6.0	4.0
300			6.0	4.0
350			2.8	0.8
400			0.7	

[For Vertical Installation] (kg)

Speed (mm/s)	Screw Lead 6mm, Acceleration/Deceleration 0.3 G, Stroke (mm) 50 or less	100 or less	12mm, 50 or less	100 or less
20	19.6	18.6	3.6	2.6
50	14.0	13.0	13.2	12.2
70	4.8	3.8	12.0	11.0
100	4.8	3.8	10.5	11.0
150	0.8		4.0	3.0
200			4.0	3.0
250			2.0	1.5
300			0.7	

* Value under the condition that no moment is applied to the end plate section. For details such as the flatness of the mounting surface, please refer to the instruction manual.

Pushing Force

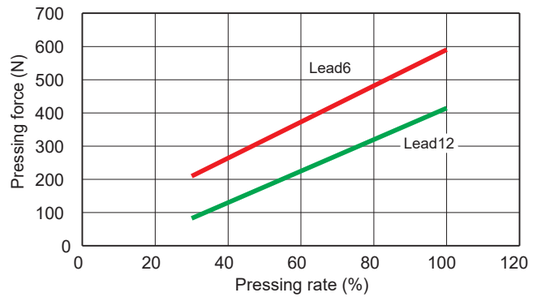

* The upper thrust force values are for reference only. They may vary depending on conditions such as the pushing speed.

Dimensions

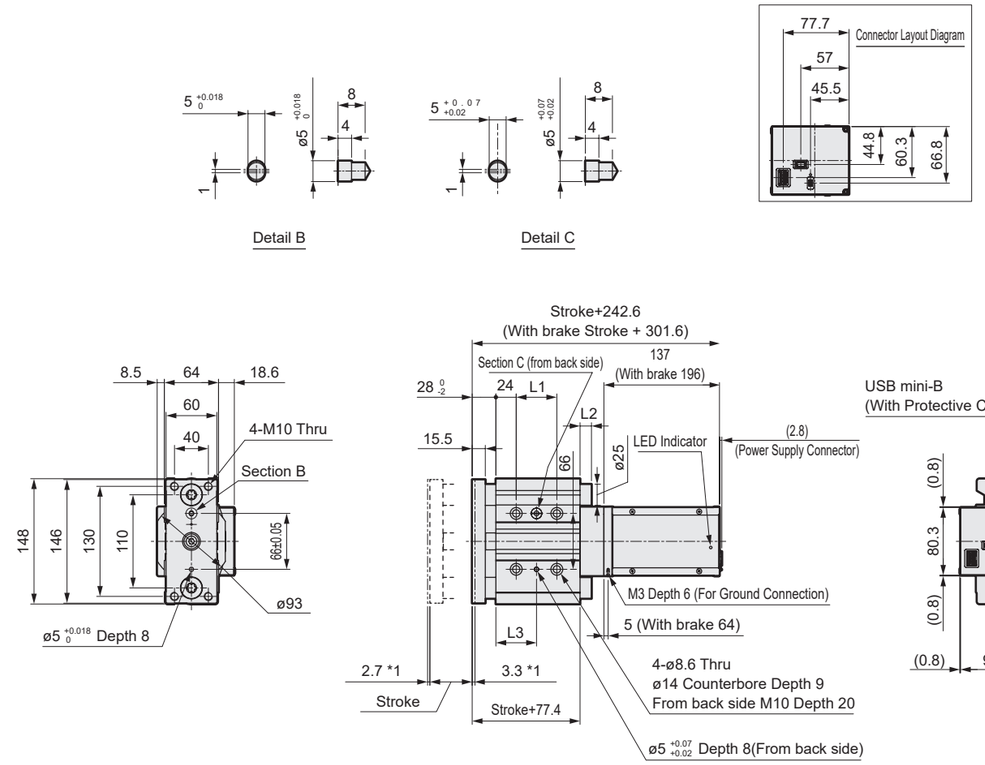

*1: Operating range to the mechanical stopper

Stroke Code		025	050	075	100
Stroke (mm)		25	50	75	100
L1		24	48	48	48
L2		13.1	13.1	38.1	38.1
L3		36	48	48	48
Weight (kg)	Without brake	5.2	5.8	6.6	7.2
	With brake	6.5	7.1	7.9	8.5

Model Selection

STEP1 Check Payload Capacity

Payload capacity changes depending on the mounting orientation, screw lead, transport speed, and acceleration/deceleration. Select the size and screw lead by referring to the System Table (P. 43), the specifications table for each model, and the payload capacity table by speed and acceleration/deceleration.

STEP2 Check Positioning Time

Calculate the positioning time for the selected product according to the example below, and check if it meets the required cycle time.

Positioning Time for General Transport Operation

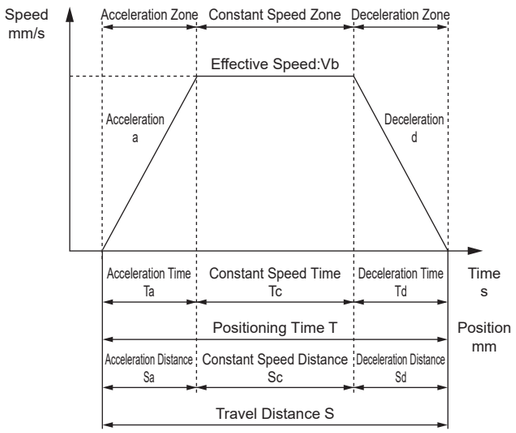

	Contents	Code	Unit	Remarks
Set Value	Set Speed	V	mm/s	
	Set Acceleration	a	mm/s²	
	Set Deceleration	d	mm/s²	
	Travel Distance	S	mm	
Calculated Value	Achieved Speed	Vmax	mm/s	$= \{2 \times a \times d \times S / (a + d)\}^{1/2}$
	Effective Speed	Vb	mm/s	The smaller of V and Vmax
	Acceleration Time	Ta	s	=Vb/a
	Deceleration Time	Td	s	=Vb/d
	Constant Speed Time	Tc	s	=Sc/Vb
	Acceleration Distance	Sa	mm	$=(axTa^2) / 2$
	Deceleration Distance	Sd	mm	$=(dxTd^2) / 2$
	Constant Speed Distance	Sc	mm	=S-(Sa+Sd)
	Positioning Time	T	s	=Ta+Tc+Td

* Do not use at speeds exceeding the specifications.
* Depending on the acceleration/deceleration and stroke, a trapezoidal velocity profile may not be formed (the set speed may not be reached). In that case, for the effective speed (Vb), choose the lesser of the set speed (V) and the achieved speed (Vmax).
* Acceleration and deceleration vary depending on the product and operating conditions. For details, please refer to P. 44, 46, and 48.
* Settling time varies depending on operating conditions but may take approximately 0.2 s.
* 1 G ≈ 9.8 m/s².

Positioning Time for Pushing Operation

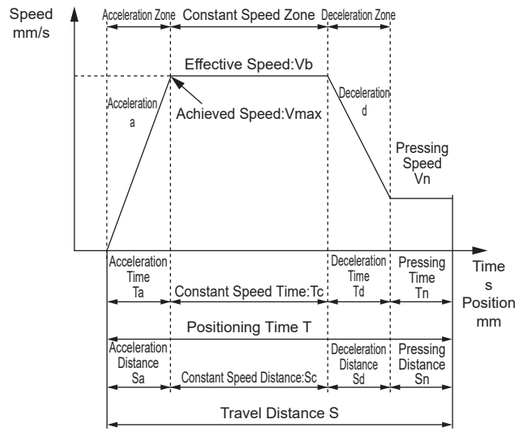

	Contents	Code	Unit	Remarks
Set Value	Set Speed	V	mm/s	
	Set Acceleration	a	mm/s²	
	Set Deceleration	d	mm/s²	
	Travel Distance	S	mm	
	Pressing Speed	Vn	mm/s	
	Pressing Distance	Sn	mm	
Calculated Value	Achieved Speed	Vmax	mm/s	$= \{2 \times a \times d \times (S - Sn + V^2 / 2 / d) / (a + d)\}^{1/2}$
	Effective Speed	Vb	mm/s	The smaller of V and Vmax
	Acceleration Time	Ta	s	=Vb/a
	Deceleration Time	Td	s	=(Vb-Vn)/d
	Constant Speed Time	Tc	s	=Sc/Vb
	Pressing Time	Tn	s	=Sn/Vn
	Acceleration Distance	Sa	mm	$=(axTa^2) / 2$
	Deceleration Distance	Sd	mm	=((Vb+Vn)xTd) / 2
	Constant Speed Distance	Sc	mm	=S-(Sa+Sd+Sn)
	Positioning Time	T	s	=Ta+Tc+Td+Tn

* Do not use at speeds exceeding the specifications.
* Depending on the acceleration/deceleration and stroke, a trapezoidal velocity profile may not be formed (the set speed may not be reached). In that case, for the effective speed (Vb), choose the lesser of the set speed (V) and the achieved speed (Vmax).
* Acceleration and deceleration vary depending on the product and operating conditions. For details, please refer to P. 44, 46, and 48.
* Settling time varies depending on operating conditions but may take approximately 0.2 s.
* 1 G ≈ 9.8 m/s².

STEP3 Check Static Allowable Load and Static Allowable Moment

Calculate the load and moment generated when the end plate is stopped. Confirm that the lateral load (W) and torsional moment (MY) are as follows. Following the calculation formula below, confirm that the combined moment (MT) satisfies the formula below.

Combined Moment

$$M_T = \frac{MP}{MP_{max}} + \frac{MR}{MR_{max}} \leq 1.0$$

Static Allowable Load/Static Allowable Moment

Model Number	Stroke (mm)	Lateral Load W(N)	Bending Moment MPmax (N·m)	Torsional Moment MYmax (N·m)	Lateral Bending Moment MRmax (N·m)
LRXG-STG-M-20	20	67	35.3	0.9	35.3
	50	46		0.62	
	75	60		0.8	
	100	51		0.69	
LRXG-STG-M-32	25	223	171.5	4.35	171.5
	50	180		3.5	
	75	179		3.48	
	100	156		3.04	
LRXG-STG-M-50	25	348	294	9.56	294
	50	296		7.86	
	75	292		8.02	
	100	257		7.07	

● Lateral Load W (N)

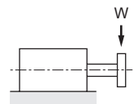

● Bending Moment MP (N·m)

$MP = F_1 \times L1 = 10 \times m_1 \times G \times L_1$

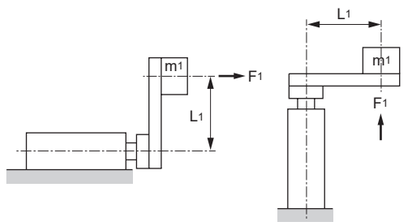

● Lateral Bending Moment MR (N·m)

$MR = F_2 \times L_2 = 10 \times m_2 \times G \times L_2$

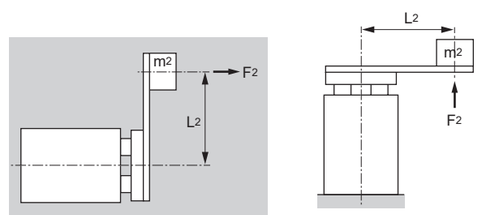

● Torsional Moment MY (N·m)

$MY = F_3 \times L_3 = 10 \times m_3 \times L_3$

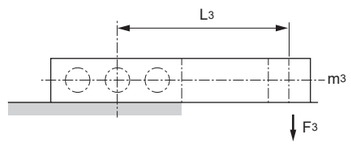

m_1, **m_2**, **m_3**: Load (kg)

L_1, **L_2**, **L_3**: Offset Distance (m)

G: Inertia Force Coefficient

Fig.1 Trend of Inertia Force Coefficient for Guided Type

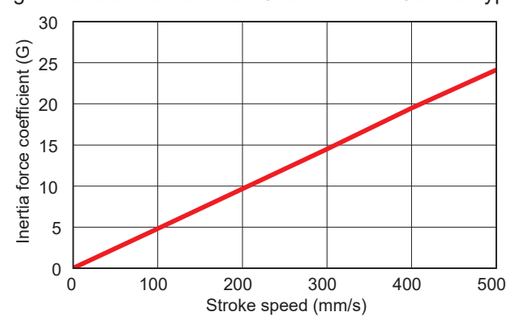

STEP4 Check Allowable Overhang Length

Confirm that the overhang length during operation is within the allowable range.

● LRXG-STG-M-20
· Stroke 50 mm or less

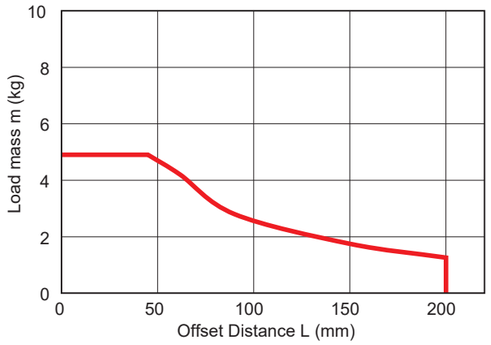

● LRXG-STG-M-32, 50
· Stroke 50 mm or less

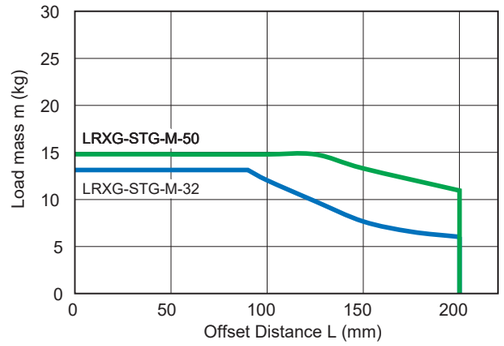

● LRXG-STG-M-20
· Stroke exceeds 50 mm

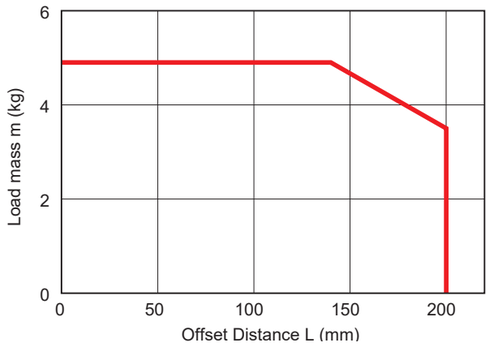

● LRXG-STG-M-32, 50
· Stroke exceeds 50 mm

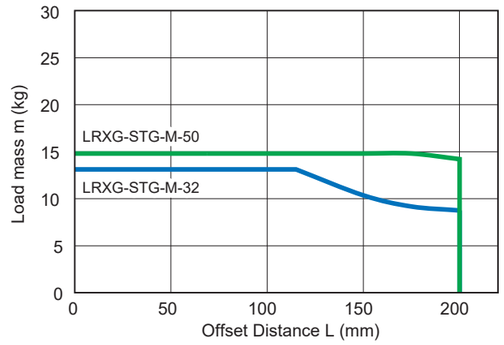

Runout Accuracy

The runout amount δ that occurs at the tip of the end plate under no load can be estimated from the values in the graph below. (Excludes deflection of the guide rod)

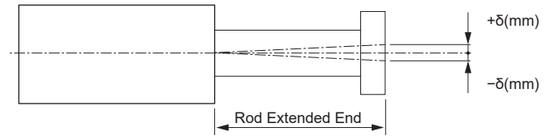

● LRXG-STG-M-20, 32

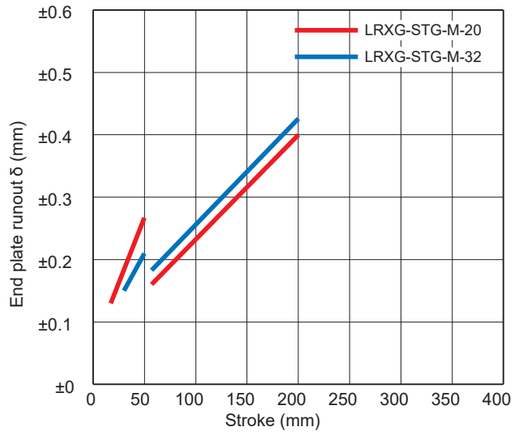

● LRXG-STG-M-50

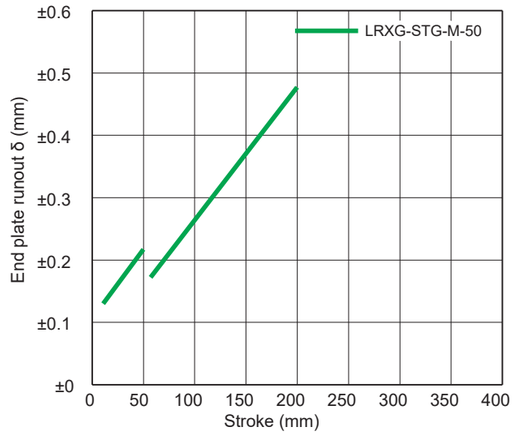

Non-rotating Accuracy (Reference value)

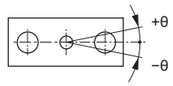

Size	Non-rotating Accuracyθ(°)
LRXG-STG-M-20	±0.07
LRXG-STG-M-32	±0.06
LRXG-STG-M-50	±0.05

Operating Range When Used as a Stopper

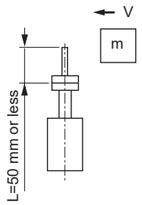

*1 When using as a stopper, please select a model with a stroke of 50 or less.
*2 The total length of the stopper section should be ℓ = 50 mm or less.
*3 When securing the actuator body, ensure the bolt screwing depth is 2d or more and consider measures to prevent loosening (adhesive, spring washer, etc.).
*4 For the calculation of the required operating thrust force, please refer to the following.
*5 Please calculate the actuator thrust force using the formula below.
Thrust Force = Vertical Payload Capacity × 10 (N)

Impact Load

LRXG-STG-M (Slide Bearing)

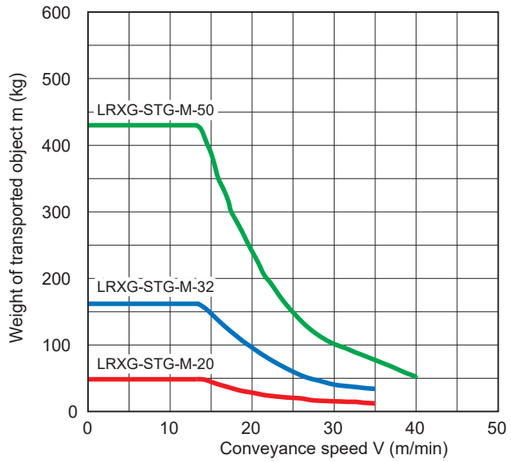

The required operating thrust force is confirmed, as the thrust force during rod retraction differs depending on the magnitude of the lateral load applied to the rod end.

1. Determine the lateral load (F) applied to the rod end.

$F = 10 \cdot m \cdot n \cdot \mu_1$

F: Lateral Load (N)
m: Transported Mass (kg)
n: Quantity of Transported Objects
μ_1: Coefficient of friction between the transport pallet and the conveyor

2. Determine the thrust force (P) required for rod retraction.

$P = F \cdot \mu_2$

P: Required Thrust Force (N)
μ_2: Coefficient of friction between the transported object and the rod
Note) The coefficient of friction differs depending on the material of the transported object, so please refer to the coefficients in the table below.

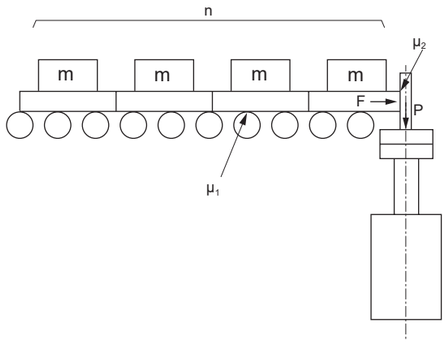

Material of Transferred Object	Steel	Aluminum	Urethane
μ_2	0.5	0.8	2.0

Allowable Lateral Load Slide Bearing

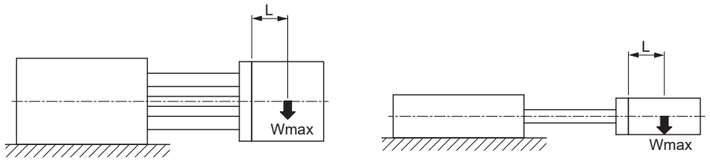

Wmax : Lateral load (kg)
L : Center of Gravity of the Load (mm)

● When L = 50 mm

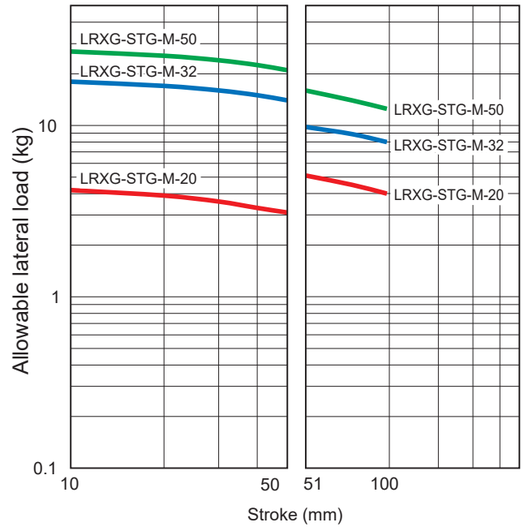

● When L = 100 mm

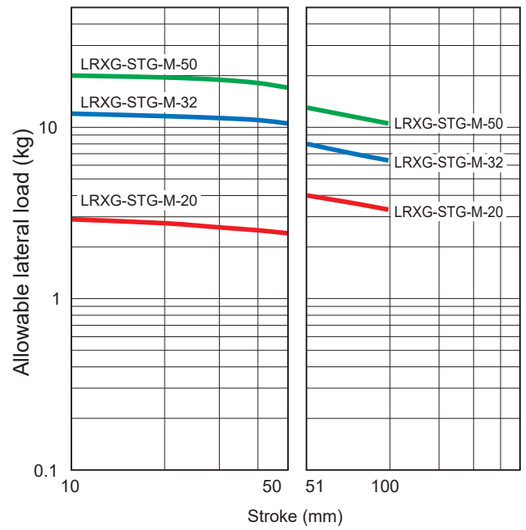

Built-in Controller

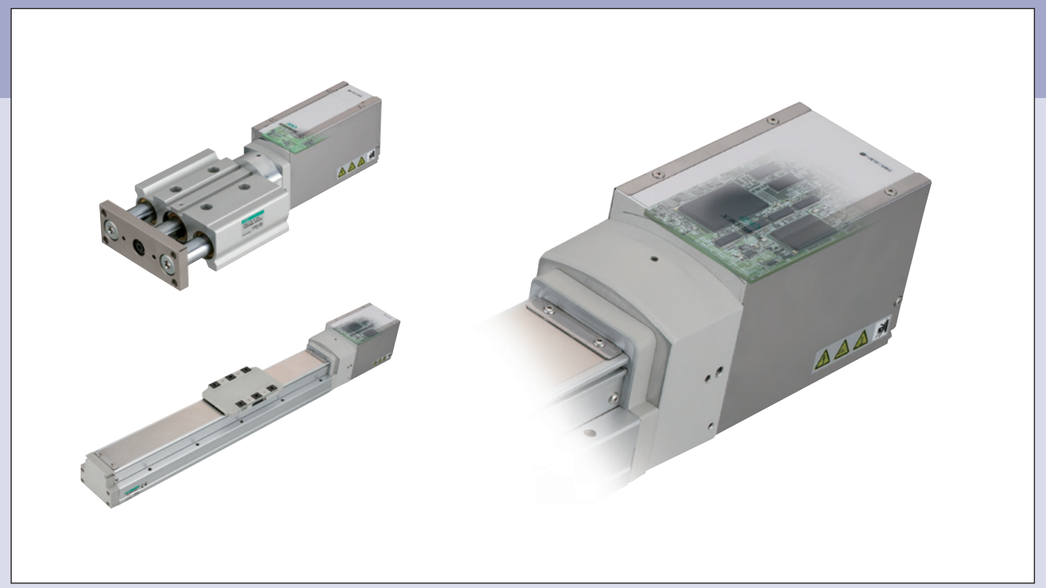

CONTENTS

- System Configuration Diagram 58
- Parallel I/O Connection Diagram 58
- Parallel I/O Input/Output Circuit 59
- Parallel I/O Operation Mode 59
- Power Supply Cable/I/O Cable 60
- Related Parts 61

⚠Precautions for Use 62

System Configuration Diagram

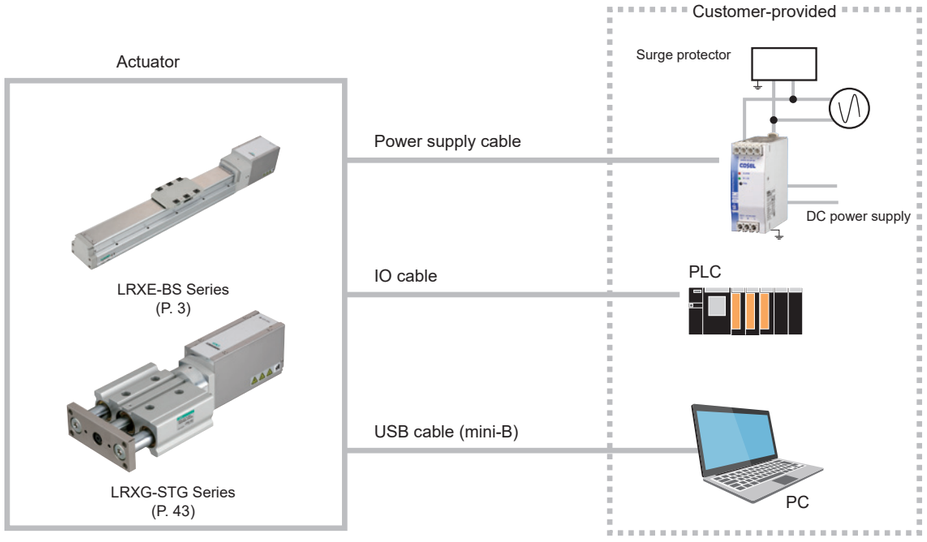

Parallel I/O (PIO) Connection Diagram

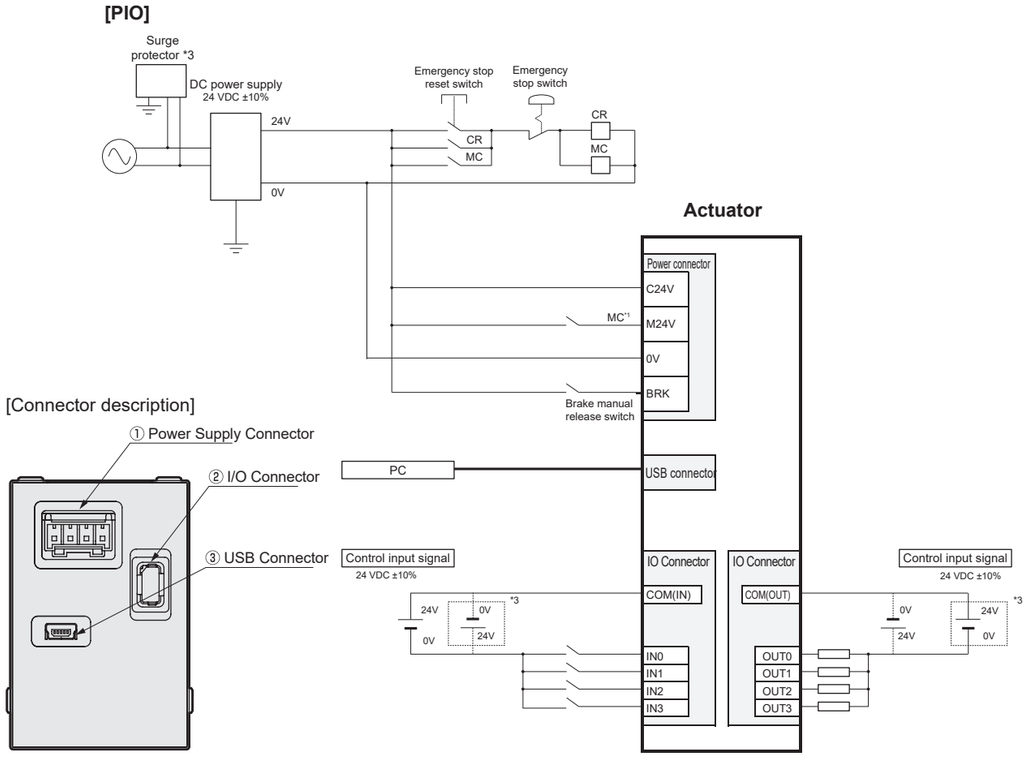

*1: To shut off the motor drive source externally, for compliance with safety categories for instance, connect the contacts of an electromagnetic switch, etc.
*2: A surge protector is required for compliance with CE Marking.
*3: Can be used even if the polarity is reversed.

Parallel I/O (PIO) Input/Output Circuit

Input Specifications

Item	Contents
Number of Input Points	4 points
Input Voltage	24 VDC ±10%
Input Current	4 mA/point
Input Voltage when ON	19 V or more
Input Voltage when OFF	0.2 mA or less

Input Circuit

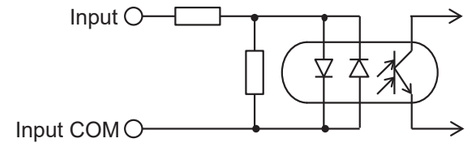

The input is non-polar.
(Input COM can be used as either + or -)

Output Specifications

Item	Contents
Number of Output Points	4 points
Load Voltage	24 VDC ±10%
Load Current	20 mA or less/point
Internal Voltage Drop when ON	3 V or less
Leakage Current when OFF	0.1 mA or less
Output Short-Circuit Protection Circuit	Yes
Connected Load	PLC, etc.

Output Circuit

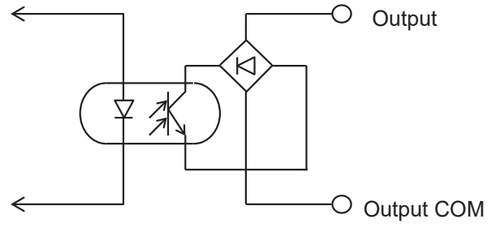

The output is non-polar.
(Output COM can be used as either + or -)

Parallel I/O (PIO) Operation Mode

Operation Mode	Number of Positioning Points	Overview
Simple 3-Point Mode	3 points	· Point number n move complete output · Alarm output · Switch n output
4-Point Mode	4 points	· Point number confirmation bit n · Alarm output
Solenoid Valve Mode Single Type	2 points	· Point number n move complete output · Alarm output · Switch n output

Parallel I/O (PIO) Signal Abbreviation List

Input Signal

Abbreviation	Name	Abbreviation	Name
PST	Point Move Command	PnST	Point Number n Move Command
PSBn	Point Number Selection Bit n	VST	Solenoid Valve Move Command
ALMRST	Alarm Reset		

Output Signal

Abbreviation	Name	Abbreviation	Name
PEND	Point Move Complete	ALM	Alarm
PCBn	Point Number Confirmation Bit n	SWn	Switch n
PnEND	Point Number n Move Complete		

Parallel I/O (PIO) Operation Mode and Signal Assignment

The signal assignment for each operation mode is as shown in the table below.

Operation Mode		Simple 3-Point Mode	4-Point Mode	Solenoid Valve Mode Single Type
Number of Positioning Points		3	4	2
Input	IN0	P1ST	PSB0	-
	IN1	P2ST	PSB1	VST
	IN2	P3ST	PST	-
	IN3	ALMRST	ALMRST	ALMRST
Output	OUT0	P1END/SW1	PCB0	P1END/SW1
	OUT1	P2END/SW2	PCB1	P2END/SW2
	OUT2	P3END/SW3	PEND	-
	OUT3	ALM#	ALM#	ALM#

* # is a negative logic signal.

I/O Cable

■ I/O Cable (For Movable)

EA - CBLNP3 - 01
❶

❶ Cable Length	
01	1m
03	3m
05	5m
10	10m

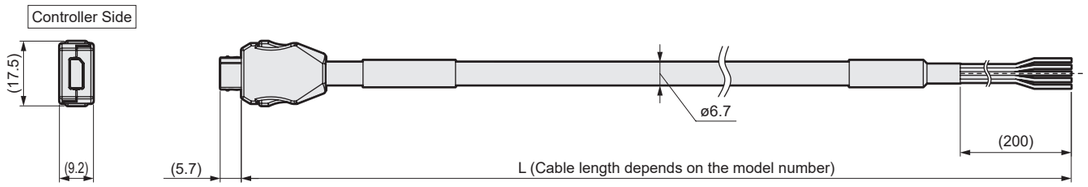

* Use with a bending radius of 40 mm or more.

Power Supply Cable

■ Power Supply Cable (For Movable)

EA - CBLP1 - 01
❶

❶ Cable Length	
01	1m
03	3m
05	5m
10	10m

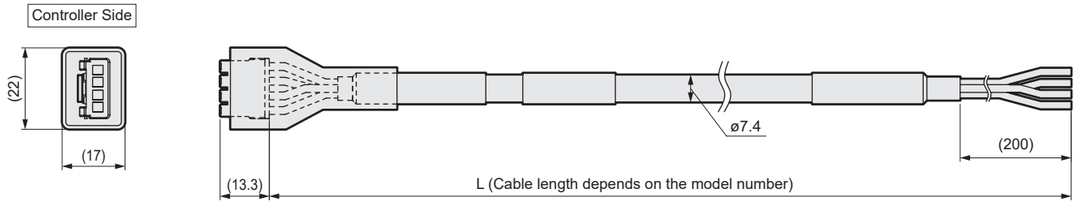

* Use with a bending radius of 70 mm or more.

Motive Power Current Consumption and Max. Current

Current Consumption

Model	Size	Motor Size	Current
LRXE-BS	04	□35	4.0A
	05	□42	4.5A
	08	□56	4.5A
LRXG-STG	20	□35	1.8A
	32	□42	2.0A
	50	□56	3.1A

* When using the brake, add the brake current (0.4 A).

Max. Current

Model	Size	Motor Size	Current
LRXE-BS	04	□35	13.0A
	05	□42	13.7A
	08	□56	14.1A
LRXG-STG	20	□35	8.1A
	32	□42	6.4A
	50	□56	6.4A

Related Parts Model No. Table

● Recommended Power Supply

Manufacturer	Model Number *1	Manufacturer Model No.	Input Voltage	Rated Current *2	Output Peak Current *2 *3	Parallel Connection	DIN Rail Compatible
COSEL CO., LTD.	EA-PWR-KHNA240F-24-N2	KHNA240F-24-N2	85-264 VAC	10A	15A	x	x
	EA-PWR-KHNA240F-24	KHNA240F-24	85-264 VAC	10A	15A	x	○

*1 Available for purchase from CKD.
*2 Derating of the output power may be necessary depending on the power supply installation method, ambient temperature, input voltage, etc. For details on the operating conditions of the power supply, please refer to the manufacturer's website..
*3 Be aware of usage restrictions due to peak current, such as duty limitations. For details, please refer to the manufacturer's website.

[Power Supply Specifications]

Item \ Model Number		EA-PWR-KHNA240F-24-N2 (Screw Mounting) EA-PWR-KHNA240F-24 (DIN Rail Mounting)
Manufacturer		COSEL CO., LTD.
Manufacturer Model No.	Screw Mounting	KHNA240F-24-N2
	DIN Rail Mounting	KHNA240F-24
Input Voltage		85 to 264 VAC 1ø or 88 to 370 VDC
Output	Power	240 W
	Voltage/Current	24 V10 A
	Variable Voltage Range	22.5 to 28.5 V
Accessory Functions	Overcurrent Protection	Operates at 101% min of peak current
	Overvoltage Protection	30.0 to 36.0 V
	Remote Control	Possible
	Remote Sensing	-
	Other	DC_OK indicator, ALARM indicator
Operating Temperature/Humidity		-25 to +70°C, 20 to 90%RH (no condensation), -40°C start-up possible *
Applicable Standards	Safety Standards, AC Input	UL60950-1, C-UL(CSA60950-1), EN62368-1
		UL508, ANSI / ISA12.12.01, ATEX certified, Electrical Appliance and Material Safety Law compliant *
	Safety Standards, DC Input	UL60950-1, C-UL(CSA60950-1), EN62368-1
	Conducted Emission	FCC-B, VCCI-B, CISPR22-B, EN55011-B, EN55022-B compliant
	Harmonic Current	IEC61000-3-2 (Class A) compliant *
Structure	Dimensions (W x H x D)	50 x 124 x 117 mm
	Weight	900 g max
	Cooling Method	Natural Air Cooling

* For details, please refer to the manufacturer's website.
* CE Marking and RoHS compliance are obtained under the manufacturer's model number.

[Dimensions]

■ EA-PWR-KHNA240F-24-N2 (For 24 V, Screw Mounting)

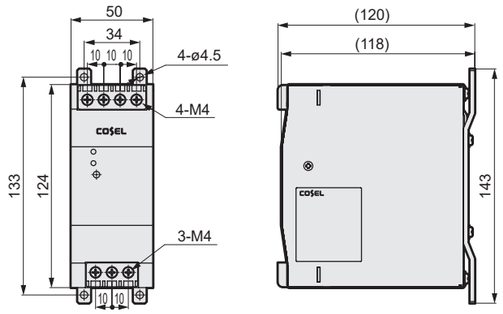

■ EA-PWR-KHNA240F-24 (For 24 V, DIN Rail Mounting)

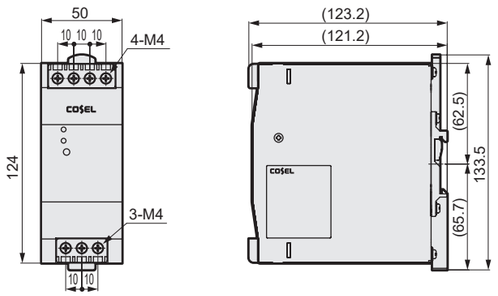

● Other Parts

Product Name	Model Number
Noise Filter for Power Supply (Single-phase, 15 A)	AX-NSF-NF2015A-OD

* Regarding the ferrite core to be used, please refer to the instruction manual.

To Use This Product Safely

Please be sure to read this before use.

When designing equipment that uses electric actuators, you have an obligation to check that the safety of the system operated by the equipment's mechanical mechanism and the controlling electrical system can be ensured, and to manufacture safe equipment. To use our products safely, it is important to select and use them correctly, handle them properly, and perform appropriate maintenance. To ensure the safety of the equipment, be sure to observe the warnings and Precautions for Use. In addition, please check that safety can be ensured in the equipment and manufacture safe equipment.

WARNING

1 This product is designed and manufactured as a component for general industrial machinery. Therefore, it should be handled by a person with sufficient knowledge and experience.

2 Use the product within its specification range.

Use outside of the product's specific specifications is not possible. Also, never modify or perform additional machining on the product. This product is intended for use in general industrial machinery equipment and parts, so it is not applicable for outdoor use or for use under the conditions or in the environments shown below. (However, this applies if you consult with us before adoption and agree to our product specifications. In the unlikely event of a failure, please take safety measures to avoid danger.)

❶Use in applications where safety is required, such as nuclear power, railways, aviation, marine vessels, vehicles, medical equipment, equipment that comes into direct contact with food and beverages, amusement equipment, emergency operation (shut-off, release, etc.) circuits, press machines, brake circuits, and safety measures.

❷Use in applications where a significant impact on people or property is expected and where special safety is required.

3 Regarding safety related to equipment design, be sure to comply with organizational standards, regulations, etc.

4 Never remove the equipment until safety has been confirmed.

❶Before inspecting or servicing machinery and equipment, confirm that safety has been ensured for all systems related to this product.

❷Even when operation is stopped, there may be hot or electrically charged parts. Please proceed with caution.

❸When inspecting or servicing equipment, turn off the power to the device and the relevant facilities, and be careful to avoid electric shock.

5 To prevent accidents, be sure to observe the instruction manual and Precautions for Use for each product.

❶During teaching operations or trial runs, the actuator may move unexpectedly. Be very careful not to put your hands near the actuator. If operating from a position where the shaft body is not visible, always confirm that it is safe for the actuator to move before operating.

6 To prevent electric shock, be sure to observe the Precautions for Use.

❶Do not touch the heat sink, cement resistors, or motor inside the controller.
It is hot and can cause burns. Please allow sufficient time to pass before performing inspections or other work.

❷Before maintenance or inspection, turn off the switch at the controller's power source before starting work. There is a risk of electric shock from high voltage.

❸Do not attach or detach connectors while the power is on. There is a risk of malfunction, failure, or electric shock.

7 Install an overcurrent protection device.

Wiring to the driver should be done in accordance with JIS B 9960-1:2019 (IEC 60204-1:2016) Safety of machinery - Electrical equipment of machines - Part 1: General requirements. Install overcurrent protection devices (molded case circuit breakers, circuit protectors, etc.) for the main power, control power, and I/O power supplies.

(Reference: JIS B 9960-1 7.2.1 General description)
If the circuit current may exceed the lesser of the rated value of the components or the allowable current of the conductor, overcurrent protection must be provided. Details on the selected rated value or set value are specified in 7.2.10.

8 To prevent accidents, be sure to observe the following Precautions for Use.

■ In the Precautions for Use shown here, the safety precaution ranks are distinguished as "DANGER," "WARNING," and "CAUTION."

DANGER: (DANGER) Indicates an imminently hazardous situation which, if not avoided, will result in death or serious injury.

WARNING: (WARNING) Indicates a potentially hazardous situation which, if not avoided, could result in death or serious injury.

CAUTION: (CAUTION) Indicates a hazardous situation which, if not avoided, could result in minor or moderate injury or property damage.

Note that even items listed under "CAUTION" may lead to serious consequences depending on the situation. All of these are important, so please be sure to follow them.

Warranty

1 Warranty Period

The warranty period for this product is one year after delivery to your specified location.

2 Scope of Warranty

If a failure clearly attributable to our company occurs during the above warranty period, we will provide a replacement for this product, necessary replacement parts free of charge, or repair it at our factory free of charge. However, cases corresponding to the following items are excluded from the scope of this warranty.

① Handling or use under conditions or in environments other than those described in the catalog, specifications, and instruction manualg
② When durability (number of cycles, distance, time, etc.) is exceeded, and for reasons related to consumable parts
③ When the cause of the failure is due to reasons other than the product itself
④ Use for purposes other than the original use of the product
⑤ When the cause is modification or repair not involving our company
⑥ In cases arising from circumstances that could not be foreseen with the technology available at the time of delivery
⑦ In cases due to causes for which our company is not responsible, such as natural disasters

Note that the warranty here pertains to the delivered product alone, and damages induced by a defect in the delivered product are excluded.

* For durability and consumable parts, please contact your nearest sales office.

3 Confirmation of Suitability

Please confirm the suitability of our product for the system, machine, or device you will be using at your own responsibility.

4 Scope of Services

The price of the delivered product does not include service fees for dispatching engineers. In the following cases, a separate fee will be charged.

(1) Guidance on installation and adjustment, and attendance at trial runs
(2) Maintenance inspections, adjustments, and repairs
(3) Technical guidance and training (operation, programming, wiring methods, safety education, etc.)

Precautions for Export

About the products and related technologies published in this catalog

For products or related technologies described in this catalog that are subject to the regulations of the U.S. Export Administration Regulations (EAR), an indication of EAR-subject items is provided on the product page. If you export or provide products or related technology subject to EAR regulations, please comply with the U.S. Export Administration Regulations (EAR).

To ensure the safe use of this product

Please read carefully before use.

Specific Precautions: Electric Actuator with Built-in Controller, LRX Series

During Design and Selection

DANGER

- Do not use in locations where hazardous materials such as ignitable, flammable, or explosive substances are present. Doing so may cause ignition, fire, or explosion.
- Ensure that the product is not exposed to water droplets, oil droplets, etc.
  This can cause fire or malfunction.
- When mounting the product, be sure to hold and secure it (including the workpiece) firmly.
  Tipping, dropping, or abnormal operation of the product can cause injury. As a general rule, secure the product using all mounting holes.
- Be sure to use a regulated DC power supply (24 VDC ±10%) for the motor and control power.
  Direct connection to an AC power supply will cause fire, bursting, or damage. If the cable length exceeds 5 m, please use 24 VDC ±5%.

WARNING

- Use the product within its specified range.
- Install a safety guard fence to prevent entry into the movable range of the electric actuator. Also, in preparation for emergencies, install an emergency stop push-button switch for the equipment in an easily accessible location. The emergency stop push-button must not reset automatically and should be structured and wired so that it cannot be reset inadvertently by a person.
- When an emergency stop is performed, it may take several seconds for the actuator to stop, depending on the speed of movement and the mounted load.
- Design a safety circuit or device to prevent equipment damage or personal injury in the event that the machine stops due to a system abnormality such as an emergency stop or power failure.
- Mount indoors in a location with low humidity.
  In locations exposed to rainwater or high humidity (over 80% humidity, or where condensation occurs), there is a risk of electrical leakage or fire. Exposure to oil droplets and oil mist is also strictly prohibited. Use in such environments will cause damage or malfunction.
- The product must be D-type grounded (ground resistance of 100 Ω or less).
  In the event of an electrical leakage, there is a risk of electric shock or malfunction.
- If using the actuator in an orientation other than horizontal or wall-mounted, select the model with a brake.
  Without a brake, when the servo is OFF (including during an emergency stop or alarm) or when the power is OFF, the movable part may fall, posing a risk of injury or damage to the workpiece.
- The brake cannot completely hold the actuator in all situations. When performing maintenance on applications that move an unbalanced load, or when stopping the machine for an extended period, always ensure a balanced state or install a mechanical locking mechanism to ensure safety.
- When the actuator is installed vertically, do not shut off the control power while the workpiece is being held by the servo ON state.
  Turn off the control power while the position is held by the brake. The workpiece may fall under its own weight, posing a risk of product damage.
- When using the actuator in a vertical orientation, position the motor on the upper side whenever possible.
  If the motor is positioned on the lower side, there is no issue during normal operation, but during long periods of stoppage, grease may separate and flow into the motor, which in rare cases can cause problems.
- Use and store the product within the specified temperature range and in a condensation-free state.
  Storage temp.: -10°C to 50°C, Storage humidity: 35% to 80%,
  Operating temp.: LRXE = 10 to 40°C, LRXG = 0 to 40°C,
  Operating humidity: 35% to 80% (This can cause abnormal product stoppage or reduced service life.) Ventilate if heat accumulates.
- Do not use in locations where condensation may occur due to sudden changes in ambient temperature.
- Install in a location free from direct sunlight, dust, nearby heat sources, corrosive gases, explosive gases, flammable gases, and combustible materials. Also, this product has not been designed with chemical resistance in mind.
  This can cause malfunction, explosion, or fire.
- Use and store in a location free from strong electromagnetic waves, ultraviolet rays, and radiation.
  This can cause malfunction or failure.
- Consider the possibility of a power source failure.
  Take measures to ensure that a failure of the power source does not cause harm to personnel or damage to the equipment.
- Consider the operational state when restarting after an emergency stop or abnormal stop.
  Design the system so that restarting does not cause harm to personnel or damage to the equipment. If it is necessary to reset the electric actuator to a starting position, design a safe control device. Consider the possibility of a failure of the installed motor. Take measures to ensure that a failure of the power source does not cause harm to personnel or damage to the equipment.
- Do not use in locations subject to impact or vibration.
- Do not apply a load to the product that exceeds the allowable values in the selection materials.
- When pushing a workpiece, etc., please use the pushing operation.

- In cases where there is a risk of danger to the human body, install a protective cover.
  If the driving part of the actuator poses a risk of danger to the human body, install a protective cover. The structure must prevent entry into the actuator's range of motion and direct contact with that area by the human body.
- Take necessary measures in advance to ensure that if this product fails, it does not adversely affect people or property.

CAUTION

- Use the product within a range where the moving table and rod do not collide with the stroke end.
- Clearly state the maintenance conditions in the equipment's instruction manual.
  The function of this product can be significantly degraded, and safety may not be ensured, depending on the usage situation, operating environment, and maintenance. If maintenance is performed correctly, the product's functions can be fully utilized.
- The product is manufactured in accordance with various standards. Never disassemble or modify it.
- The suitability of our product for the system, machine, or equipment to be used by the customer should be confirmed by the customer at their own responsibility.
- Wire in a way that does not induce noise.
  Avoid locations where large currents or strong magnetic fields are generated. Do not route in the same wiring (e.g., in a multi-core cable) as the power lines for large motors other than this product. Do not route in the same wiring as the inverter power supply or wiring used for robots, etc. Apply a frame ground to the power supply and insert a filter at the output section.
- Do not use in an environment where strong magnetic fields are generated.
  This can cause malfunction.
- Separate the power supply for the output section of this product from the power supply for inductive loads that generate surges, such as solenoid valves and relays.
  If the power supply is shared, surge current can flow back into the output section, causing damage. If a separate power supply cannot be used, connect a surge suppressor directly in parallel with every inductive load.
- During power-ON, the actuator performs an origin detection sequence. If an external stopper or holding mechanism (e.g., a brake) is present, the actuator may incorrectly recognize an unintended position as the origin. Please pay attention to the placement of external stoppers to ensure the origin can be reliably detected after power-ON.
- When using the LRXE/LRXG series, do not subject the surface of the motor section to a magnetic field with a magnetic flux density of 0.7 mT or greater.
  Doing so may cause product damage or malfunction.
- When installing multiple LRXE/LRXG series units, separate the motor sections by at least the distance shown in the diagram below.
  Failure to maintain this distance may cause malfunction.

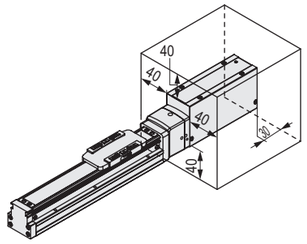

- When transporting or installing, do not carry the product by its moving parts or cable.
  Doing so may cause injury or cable damage.

- When transporting and mounting the actuator, hold the main body and ensure that excessive force is not applied to the motor section.
- Ensure that the workpiece attached to the slider does not interfere with the motor section.
  On some models, the dimensions of the motor section are larger than the height of the slider mounting surface.
- Durability varies depending on factors such as the transport load and environment. Ensure that settings such as the transport load have a sufficient operating margin.
- Do not subject the moving parts to impact.
- Install the product so that it is not subjected to torsional or bending forces.
- Do not use in locations exposed to ultraviolet rays or in atmospheres containing corrosive gases, salt, etc.
  This may lead to performance degradation, abnormal operation, or reduced strength due to corrosion.
- For the LRXE-BS series (slider type), the flatness of the installation surface must be 0.05 mm / 200 mm or less.
- For the LRXE-BS series (slider type), the flatness of the workpiece mounting surface on the slider must be 0.02 mm or less, and do not subject the product to torsional or bending forces.
  Doing so may cause product damage or malfunction.
- When using the positioning holes, use pins dimensioned to prevent a press-fit. Using press-fit pins may damage the linear guide due to the press-fitting load or cause reduced accuracy due to distortion. The recommended tolerance for the pins is JIS tolerance m6 or less.
- For the LRXG series (guided type), avoid making dents or scratches on the main body (tube) mounting surface or the end plate surface that could impair flatness. As a guideline, the flatness of the mating surface that attaches to the end plate should be 0.03 mm or less.

For precautions regarding mounting, installation, adjustment, use, and maintenance, please see the Instruction Manual on the CKD Components website (https://www.ckd.co.jp/kiki/en/) → "Model No." → Instruction Manual.

LRXE-BS Model Selection Check Sheet →CKD (To:)

Please fill out this form and send it to your nearest sales office. We will reply with the model selection results.

Customer:

Company Name		Department	
Name		Email	
TEL		FAX	

Selection Conditions:

Desired Model	LRXE-		
Basic Specifications	Max. Stroke:	mm, Ball Screw Lead:	mm
Operating Conditions	Travel Stroke:	mm, Travel Time:	s
	Set Speed:	mm/s	
	Set Acceleration/Deceleration:	mm/s² (Set Accel./Decel. Time:	s)
	Repeatability: ±	mm	
Load Conditions	Slider Type		
	Load Weight: kg		
	Mounting Orientation: Horizontal/Wall-mounted/Vertical/Ceiling-mounted/ Other 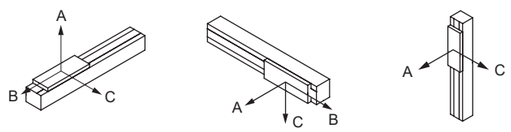		
	Distance from slider center to load's center of gravity		
	Direction A: mm Direction B: mm Direction C: mm		
	Pressing Load: Without / With (N) During Operation / When Stopped Direction of force on slider center ( )		
Operating Environment	Ambient Temperature: °C, Ambient Humidity: %		
	Atmosphere:		
Interface Specifications	Parallel I/O		
Special Notes			

LRXG-STG Model Selection Check Sheet →CKD (To:)

Please fill out this form and send it to your nearest sales office. We will reply with the model selection results.

Customer:

Company Name		Department	
Name		Email	
TEL		FAX	

Selection Conditions:

Desired Model	LRXG		
Basic Specifications	Max. Stroke:	mm, Ball Screw Lead:	mm
Operating Conditions	Travel Stroke:	mm, Travel Time:	s
	Set Speed:	mm/s	
	Set Acceleration/Deceleration:	mm/s² (Set Accel./Decel. Time:	s)
	Repeatability: ±	mm	
Load Conditions	Mounting Orientation: Horizontal/Wall-mounted/Vertical/Ceiling-mounted/Other		
	Load Weight: kg External force applied to the end plate:		
	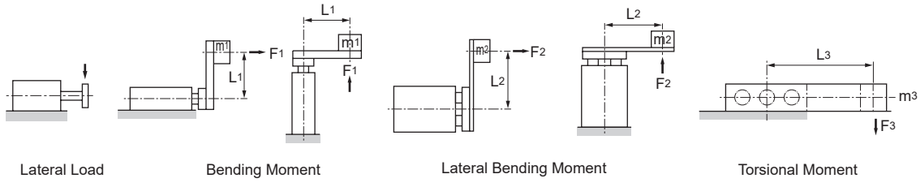 Lateral Load (Load: N) / Bending Moment (Weight: kg) Distance: mm) / Lateral Bending Moment (Weight: kg) Distance: mm) / Torsional Moment (Weight: kg) Distance: mm)		
	Stopper Use: Without / With Transferred Mass: kg Transfer Speed: m/s Transferred Quantity: pcs	Pressing Load: Without / With (N) During Operation / When Stopped Direction of force on plate center ( )	
Operating Environment	Ambient Temperature: °C, Ambient Humidity: %		
	Atmosphere:		
Interface Specifications	Parallel I/O		
Special Notes			

MEMO

Related Products

Electric Actuator ROBODEX Pulse

Cat. No. RJ-014AA

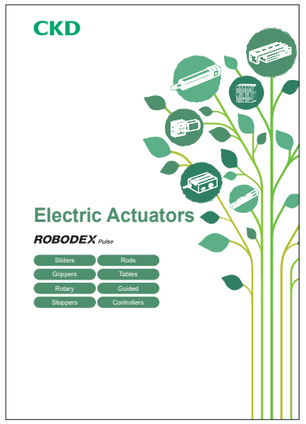

We offer a wide lineup of electric actuators with integrated motors.

- ■ Slider Type : EJSG, EBS, EBR Series
- ■ Rod Type : EBR Series
- ■ F Series : FLCR, FGRC, FLSH, FFLD Series
- ■ G Series : GSSD2, GSTK, GSTG, GSTS, STL, GCKW Series
- ■ D Series : DSSD2, DSTK, DSTG, DSTS, STL, DMSDG, DLSH, DCKW Series

Four types of controllers are also available for our electric actuators.

- ■ Multi Axis Controller : ECMG Series
- ■ Single Axis Controller : ECG, ECR, ESC4 Series

■ ABSODEX
Actuator: AX1R, AX2R, AX4R Series
Driver: AXD Series

●The Direct Drive Actuator: Engineered for ease of use.
From palm-sized models to high-torque solutions.
Simplify the design of your transfer, positioning, and other equipment.

■ τ DISC Series

●High-performance Direct Drive Servo Motor
A diverse lineup that meets various demands such as high precision, high speed, and stable velocity. Achieving a higher level of performance.

NIKKI DENSO

WORLD-NETWORK

CKD Corporation

Website https://www.ckd.co.jp/en/

□ 2-250 Ouji, Komaki City, Aichi 485-8551, Japan
□ PHONE +81-568-74-1338 FAX +81-568-74-1165

ASIA

喜開理(上海)機器有限公司 CKD(SHANGHAI)CORPORATION

- ●営業部/上海浦西事務所(SALES HEADQUARTERS / SHANGHAI PUXI OFFICE)
  Room 612, 6th Floor, Yuanzhongkeyan Building, No. 1905 Hongmei Road, Xuhui District, Shanghai 200233, China
  PHONE +86-21-60906046 FAX +86-21-60906046
- 上海浦東事務所(SHANGHAI PUDONG OFFICE)
- 寧波事務所(NINGBO OFFICE)
- 杭州事務所(HANGZHOU OFFICE)
- 無錫事務所(WUXI OFFICE)
- 昆山事務所(KUNSHAN OFFICE)
- 蘇州事務所(SUZHOU OFFICE)
- 南京事務所(NANJING OFFICE)
- 合肥事務所(HEFEI OFFICE)
- 成都事務所(CHENGDU OFFICE)
- 武漢事務所(WUHAN OFFICE)
- 鄭州事務所(ZHENGZHOU OFFICE)
- 長沙事務所(CHANGSHA OFFICE)
- 重慶事務所(CHONGQING OFFICE)
- 西安事務所(XIAN OFFICE)
- 広州事務所(GUANGZHOU OFFICE)
- 中山事務所(ZHONGSHAN OFFICE)
- 深圳西事務所(WEST SHENZHEN OFFICE)
- 深圳東事務所(EAST SHENZHEN OFFICE)
- 東莞事務所(DONGGUAN OFFICE)
- 厦門事務所(XIAMEN OFFICE)
- 福州事務所(FUZHOU OFFICE)
- 瀋陽事務所(SHENYANG OFFICE)
- 大連事務所(DALIAN OFFICE)
- 長春事務所(CHANGCHUN OFFICE)
- 北京事務所(BEIJING OFFICE)
- 天津事務所(TIANJIN OFFICE)
- 青島事務所(QINGDAO OFFICE)
- 潍坊事務所(WEIFANG OFFICE)
- 済南事務所(JINAN OFFICE)
- 烟台事務所(YANTAI OFFICE)

CKD INDIA PRIVATE LTD.

- ●HEADQUARTERS
  Unit No. 607, 6th Floor, Welldone Tech Park, Sector 48, Sohna Road, Gurgaon-122018, Haryana, India
  PHONE +91-124-418-8212
- BANGALORE OFFICE
- PUNE OFFICE
- CHENNAI OFFICE
- MUMBAI OFFICE
- HYDERABAD OFFICE

PT CKD TRADING INDONESIA

- ●HEAD OFFICE
  Menara Bidakara 2, 18th Floor, Jl. Jend. Gatot Subroto Kav. 71-73, Pancoran, Jakarta 12870, Indonesia
  PHONE +62-21-2938-6601 FAX +62-21-2906-9470
- MEDAN OFFICE
- BEKASI OFFICE
- KARAWANG OFFICE
- SEMARANG OFFICE
- SURABAYA OFFICE

CKD KOREA CORPORATION

- ●HEADQUARTERS
  (3rd Floor), 44, Sinsu-ro, Mapo-gu, Seoul 04088, Korea
  PHONE +82-2-783-5201～5203 FAX +82-2-783-5204
- 水原営業所(SUWON OFFICE)
- 天安営業所(CHEONAN OFFICE)
- 蔚山営業所(ULSAN OFFICE)

M-CKD PRECISION SDN.BHD.

- ●HEAD OFFICE
  Lot No.6,Jalan Modal 23/2, Seksyen 23, Kawasan MIEL, Fasa 8, 40300 Shah Alam,Selangor Darul Ehsan, Malaysia
  PHONE +60-3-5541-1468 FAX +60-3-5541-1533
- JOHOR BAHRU BRANCH OFFICE
- PENANG BRANCH OFFICE

CKD SINGAPORE PTE. LTD.

No.33 Tannery Lane #04-01 Hoesteel Industrial Building, Singapore 347789, Singapore
PHONE +65-67442623 FAX +65-67442486

CKD CORPORATION BRANCH OFFICE

No.33 Tannery Lane #04-01 Hoesteel Industrial Building, Singapore 347789, Singapore
PHONE +65-67447260 FAX +65-68421022

CKD THAI CORPORATION LTD.

- ●HEADQUARTERS
  19th Floor, Smooth Life Tower, 44 North Sathorn Road, Silom, Bangrak, Bangkok 10500, Thailand
  PHONE +66-2-267-6300 FAX +66-2-267-6304-5
- NAVANAKORN OFFICE
- EASTERN SEABOARD OFFICE
- LAMPHUN OFFICE
- KORAT OFFICE
- AMATANAKORN OFFICE
- PRACHINBURI OFFICE
- SARABURI OFFICE

台湾喜開理股份有限公司 TAIWAN CKD CORPORATION

- ●HEADQUARTERS
  16F-3, No. 7, Sec. 3, New Taipei Blvd., Xinzhuang Dist., New Taipei City 242, Taiwan
  PHONE +886-2-8522-8198 FAX +886-2-8522-8128
- 新竹営業所(HSINCHU OFFICE)
- 台中営業所(TAICHUNG OFFICE)
- 台南営業所(TAINAN OFFICE)
- 高雄営業所(KAOHSIUNG OFFICE)

CKD VIETNAM ENGINEERING CO.,LTD.

- ●HEADQUARTERS
  18th Floor, CMC Tower, Duy Tan Street, Cau Giay District, Hanoi, Vietnam
  PHONE +84-24-3795-7631 FAX +84-24-3795-7637
- HO CHI MINH OFFICE

EUROPE

CKD EUROPE B.V.

- ●HEADQUARTERS
  Beechavenue 125A, 1119 RB Schiphol-Rijk, the Netherlands
  PHONE +31-23-554-1490
- CKD EUROPE GERMANY OFFICE
- CKD EUROPE UK
- CKD EUROPE CZECH O.Z.

CKD CORPORATION EUROPE BRANCH

Beechavenue 125A, 1119 RB Schiphol-Rijk, the Netherlands
PHONE +31-23-554-1490

CKD ITALIA S.R.L.

Via di Fibbiana 15 Calenzano (FI) CAP 50041, Italy
PHONE +39 0558825359 FAX +39 0558827376

NORTH AMERICA & LATIN AMERICA

CKD MEXICO, S. DE R.L. DE C.V.

Cerrada la Noria No. 200 Int. A-01, Querétaro Park II, Parque Industrial Querétaro, Santa Rosa Jáuregui, Querétaro, C.P. 76220, México
PHONE +52-442-161-0624

CKD USA CORPORATION

- ●HEADQUARTERS
  1605 Penny Lane, Schaumburg, IL 60173, USA
  PHONE +1-847-648-4400 FAX +1-847-565-4923
- LEXINGTON OFFICE
- SAN ANTONIO OFFICE
- SAN JOSE OFFICE/ TECHNICAL CENTER
- DETROIT OFFICE
- BOSTON OFFICE

The goods and/or their replicas, the technology and/or software found in this catalog are subject to complementary export regulations by Foreign Exchange and Foreign Trade Law of Japan. If the goods and/or their replicas, the technology and/or software found in this catalog are to be exported from Japan, Japanese laws require the exporter makes sure that they will never be used for the development and/or manufacture of weapons for mass destruction.

●Specifications are subject to change without notice.

Ⓒ CKD Corporation 2024 All copy rights reserved.

2025.10