CKD

Components for Pure water/Chemical liquids

Wet Fine Components General Catalog

Chemical Processes Components

CKD Corporation

CB-031AA 16

Pioneering the future of process control

Wet Fine system ideal for semiconductor/liquid crystal manufacturing processes using pure water, chemical liquids, etc.

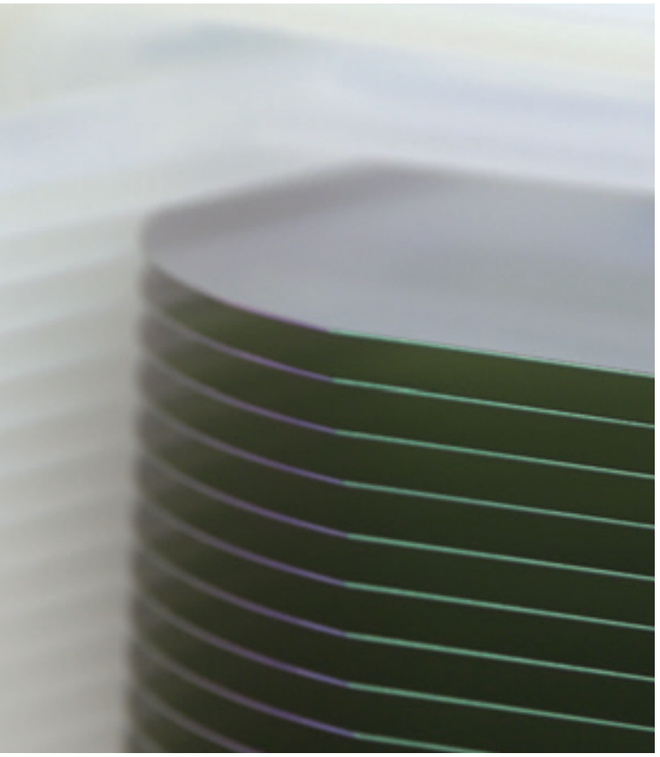

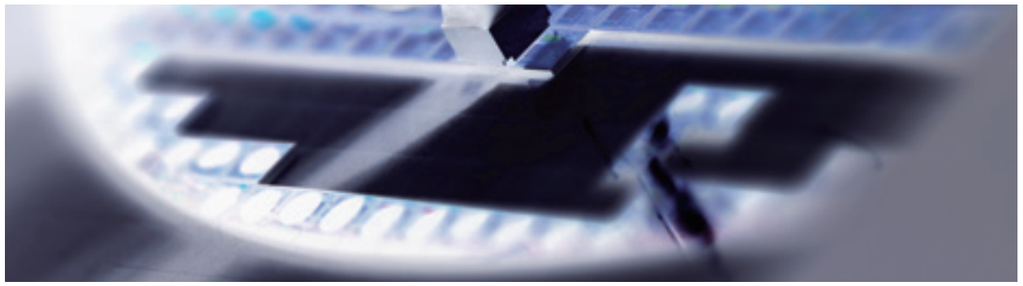

Ultra Fine concept

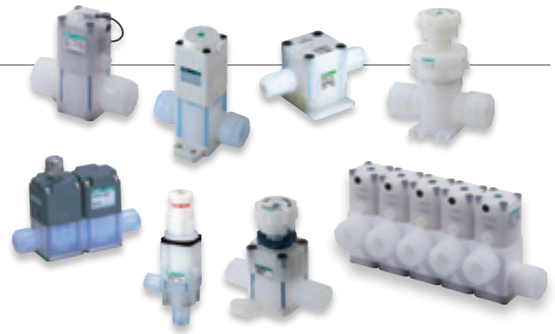

Introducing an all-clean process for essential factors of product development from design to evaluation, manufacturing and production.

Product cleanliness control is done thoroughly based on CKD's unique concept.

Variety of fitting variations

Fittings of six models by four manufacturers can be integrated for various equipment and applications.

Fitting system	Super type pillar fitting	Super 300 Pillar fitting P Series	F-LOCK 20A Series fitting	F-LOCK 60 Series fitting	Final Lock fitting	Flaretek fitting
Manufacturer	Japan Pillar Industry Co., Ltd.	Japan Pillar Industry Co., Ltd.	Flowell Co., Ltd.	Flowell Co., Ltd.	Kurabo Industries Co., Ltd..	Entegris,Inc.

A consistent quality control system that ensures high cleanliness, including parts and products.

In-house production system

In every production process from processing to assembly, inspection and packaging, we have established a completely consistent quality control system not only at the product level but down to the parts level. For cleanliness, which is an important point of quality, we have incorporated in-house standards such as quantities of chemical liquid residue, organic carbon content, specific oil content and other impurity standards, and established solid quality.

Prod process example

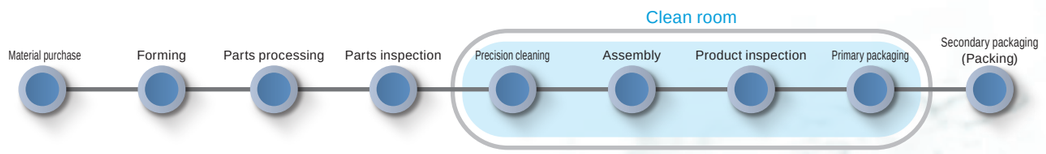

INDEX

	Listed page
Series variation	Intro Page 5
⚠ Safety precautions	Intro Page 7

		Model No.	Listed page
Air operated valve	Part3R Series	AMD**3R (2-port)	2
		AMG**3R (3-port)	10
		GAMD**3R (manifold)	14
	Part2 Series	AMD**2 (2-port)	20
		AMG**2 (3-port)	48
		GAMD**2 (Manifold)	56
		AMD**2/AMG**2/GAMD**2 (high-pressure specification)	64
	Part1 Series (Compact)	AMDZ*, AMD0* (2-port)	66
		AMGZ0, AMG00 (3-port)	72
	High pressure	AMD*1H	76
	Metal-free	AMD*1M	82
	Large bore size	LYX-1380	86
	PVC	AMD*1L	88
	For liquid discharge	LYX-0877 to 0880 LYX-1451 to 1454	96
Manual valve	Part3RN Series	MMD*03RN (2-port)	104
		GMMD*03RN (Manifold)	112
	Part2 Series	MMD*02 (2-port)	116
		GMMD*02 (Manifold)	130
	High pressure	MMD*0H	138
	Metal-free	MMD*0M	142
	Large bore size	LYX-1381	146
Drip prevention valve	Single unit	AMS	150
	Air operated integrated	AMDS	154
Regulator	Pilot operated	PMP	160
	Manual	PYM/PMM	166
Flow rate adjusting valve	Motorized	MNV	174
	Manual	FMD	176
	Manual Fine flow rate	LYX-0961 LYX-0965	180
Fine level switch		KML703	184
		KML60	188
		MXKML	
		KML50	192
		MKML	
Related products	Solenoid valve for operation	MN3E/MN4E	198
		3QRA/B	
		MN4GA/B R	
	Electro-pneumatic regulator	EVS2	199
		MEVT	
		EVR	
	Clean regulator	RC2000	200
	Flow rate sensor	FSM3	
	Auxiliary components	Airfiber	
		FCS	201
Systems			202

Series variation

Main series Features

- Fluid control components that emphasize high cleanliness and high durability -

* Check usability by carefully considering the compatibility of working fluids with product materials, working conditions, etc.
Refer to the information on each page for details on the materials used and specifications of each product.

Category		Photo	Model	Features	Main application examples (Semiconductors/FPD)			Component materials		Connection size (tube outer diameter)														Connection											Listed page
								Wetted parts	Non-wetted									Nominal diameter (union/flange connection)																	
					Coater / Developer	Cleaning	Chemical liquid feed equipment	Body (*PTFE is used for the diaphragm)	Actuator	1/8", 3mm	1/4", 6mm	8 mm	3/8", 10mm	1/2", 12mm	3/4", 16mm	1", 25mm	1, 1/4"	1 / 1/2"	16 mm	20 mm	25 mm	30 mm	40 mm	50 mm	Super Type	Super 300	F-LOCK20	F-LOCK60	Final Lock	Flaretek	Rc thread	Stainless steel tube	Double barbed	PVC union	PFA pipe for welding	PVDV union fitting	
Open/ Close valve	Part3R(N) Series		AMD**3R (air operated)	New standard model supporting a wide range of fluid, pressure and temperature conditions. The manual type has improved reliability with new mechanisms such as over-tightening prevention mechanism and lock ring to prevent accidental operation (MMD*03RN).	●	●	●	PTFE / PFA	PVDF	●	●	●	●	●	●	●									●		●									2
			MMD*03RN (manual)			●	●				●	●	●	●	●	●									●		●									104
	Part2 Series		AMD**2 (air operated)	Compatible with high temperature fluids (AMD**2). Wide range of connection options	●	●	●	PTFE / PFA / Stainless steel	PPS / PP / Aluminum alloy		●	●	●	●	●	●								●	●	●	●	●	●	●	●	●				20
			MMD*02 (manual)			●	●		PP /Aluminum alloy				●	●	●	●																				116
	Part1 Series		AMD** (air operated)	Compact, space saving and ideal for small flow rate control lines	●			PTFE / PFA / Stainless steel	PPS	●	●													●	●	●	●	●	●	●						66
	High pressure		AMD*1H (air operated)	Supports high pressure, high back pressure and large flow rate for chemical liquid supply facilities in semiconductor manufacturing factories, enabling safe chemical liquid feed operation.			●	PFA	PP					●	●	●	●								●				●					●		76
			MMD*0H (manual)																																138
	Metal-free		AMD*1M (air operated)	Supports strong acid (hydrochloric acid, hydrofluoric acid, nitric acid) lines with high concentration and high corrosiveness in chemical liquid supply facilities and the like in semiconductor manufacturing plants.		●	●	PFA	PVDF				●	●	●	●									●											82
			MMD*0M (manual)																																142
	Large bore size		LYX-1380 (air operated)	Port size 1.5" for large flow rate liquid feed.			●	PTFE	PP									●							●											86
			LYX-1381 (manual)																																146
	PVC		AMD*1L (air operated)	PVC union fitting is provided as standard for piping connection using water hammer reduced structure.	●	●		PVC	PPS										●	●	●	●	●	●									●			88
Drip prevention valve			AMS, AMDS	High precision liquid drainage and drip prevention control prevent discharge failures. It also supports optimized custom-made designs for fluid viscosity. Discrete (AMS)/air operated valve integrated (AMDS).	●			PTFE / PFA / Stainless steel	PPS	●	●													●	●	●	●	●	●	●						150
Regulator			PMP (pilot operated)	Pressure and flow rate can be controlled by pilot air remote control. Balance between space saving and pressure stability on a high level.	●		●	PTFE, PFA	PVDF		●		●	●	●	●									●		●									160
			PYM (manual)	Stainless steel body (for Air/N_2 gas/pure water)	●			Stainless steel	Stainless steel	●	●																			●						166
			PMM (manual)	Uses a fluoro resin body (for pure water)	●			PTFE / PFA	PP			●	●			●								●	●	●	●	●	●						●	168
Needle valve			MNV (motorized)	Highly precise variable flow rate setting by remote control			●	PTFE	PPS				●												●											174
			FMD (Manual)	Flow rate adjustment of highly corrosive fluid is possible			●	PTFE / PFA	PVDF		●		●												●											176
			LYX-0961, LYX-0965 (manual)	Fine flow rate can be adjusted. Discrete (LYX-0965), integrated with air operated valve (LYX-0961)	●		●	PTFE	PPS	●														●	●	●	●			●						180

Safety Precautions

Be sure to read this section before use.

When designing and manufacturing equipment using CKD wet fine system products, the manufacturer is obligated to ensure that the safety of the mechanism, pneumatic control circuit and/or water control circuit and the system that runs the electrical controls are secured.
It is important to select, use, handle and maintain CKD products appropriately to ensure their safe usage.
Observe warnings and precautions to ensure device safety.
Check that device safety is ensured, and manufacture a safe device.

WARNING

1 This product is designed and manufactured as a general industrial machine part. It must be handled by an operator having sufficient knowledge and experience.

2 Use this product in accordance with specifications.

This product must be used within its stated specifications. In addition, never modify or additionally machine this product.
This product is intended for use in general industrial machinery equipment or parts. It is not intended for use outdoors (except for products with outdoor specifications) or for use under the following conditions or environments. (Note that this product can be used when CKD is consulted prior to its usage and the customer consents to CKD product specifications. The customer should provide safety measures to avoid danger in the event of problems.)

❶ Use for applications requiring safety, including nuclear energy, railways, aircraft, marine vessels, vehicles, medical devices, devices or applications in contact with beverages or foodstuffs, amusement devices, emergency cutoff circuits, press machines, brake circuits, or safety devices or applications.
❷ Use for applications where life or assets could be significantly affected, and special safety measures are required.

3 Observe organization standards and regulations, etc., related to the safety of the device design and control, etc.

ISO4414, JIS B 8370(Pneumatic fluid power - General rules and safety requirements for systems and their components)
JFPS2008 (Principles for pneumatic cylinder selection and use)
Including the High Pressure Gas Safety Act, Industrial Safety and Health Act, other safety rules, organization standards and regulations, etc.

4 Do not handle, pipe, or remove devices before confirming safety.

❶ Inspect and service the machine and devices after confirming safety of all systems related to this product.
❷ Note that there may be hot or charged sections even after operation is stopped.
❸ When inspecting or servicing the device, turn OFF the energy source (air supply or water supply), and turn OFF power to the facility. Discharge any compressed air from the system, and pay attention to possible water leakage and leakage of electricity.
❹ When starting or restarting a machine or device that incorporates pneumatic components, make sure that the system safety, such as pop-out prevention measures, is secured.

5 Observe the warnings and cautions on the following pages to prevent accidents.

■ Precautions are ranked as “DANGER”, “WARNING”, and “CAUTION” in this section.

DANGER: In the case where the product operation is mishandled and/or when the urgency of a dangerous situation is high, it may lead to fatalities or serious injuries.

WARNING: A dangerous situation may occur if handling is mistaken, leading to fatal or serious injuries.

CAUTION: A dangerous situation may occur if handling is mistaken, leading to minor injuries or property damage.

Note that some items indicated with “CAUTION” may lead to serious results depending on the conditions.
All items contain important information and must be observed.

Warranty

1 Warranty period

The product specified herein is warranted for one and a half (1.5) years from the date of delivery to the location specified by the customer.

2 Warranty coverage

If the product specified herein fails for reasons attributable to CKD within the warranty period specified above, CKD will promptly provide a replacement for the faulty product or a part thereof or repair the faulty product at one of CKD's facilities free of charge.
However, following failures are excluded from this warranty:

1) Failure caused by handling or use of the product under conditions and in environments not conforming to those stated in the catalog, the Specifications, or the Instruction Manual.
2) Failure caused by use of the product exceeding its durability (cycles, distance, time, etc.) or caused by consumable parts.
3) Failure not caused by the product.
4) Failure caused by use not intended for the product.
5) Failure caused by modifications/alterations or repairs not carried out by CKD.
6) Failure caused by reasons unforeseen at the level of technology available at the time of delivery.
7) Failure caused by acts of nature and disasters beyond control of CKD.

The warranty stated herein covers only the delivered product itself. Any loss or damage induced by failure of the delivered product is excluded from this warranty.
Note: For details on the durability and consumable parts, contact your nearest CKD sales office.

3 Compatibility check

The customer is responsible for confirming the compatibility of CKD products with the customer's systems, machines and equipment.

Precautions for export

1 Security Trade Control

The products in this catalog and their related technologies may require approval before export or provision.
For the sake of maintaining world peace and safety, there may be cases in which approval under the Foreign Exchange and Foreign Trade Control Law is required in advance, depending on the country to where the product or related technology is being exported or provided.
The scope of products and related technologies requiring approval is listed in the Export Trade Control Order Appendix Table 1 or Foreign Exchange Order Appendix Table.
The Export Trade Control Order Appendix Table 1 and Foreign Exchange Order Appendix Table contain the following two types of information:

- List controls, which are specified for items 1 to 15
- "Catch-all controls" that do not indicate specifications by item, but restrict by application (Section 16)

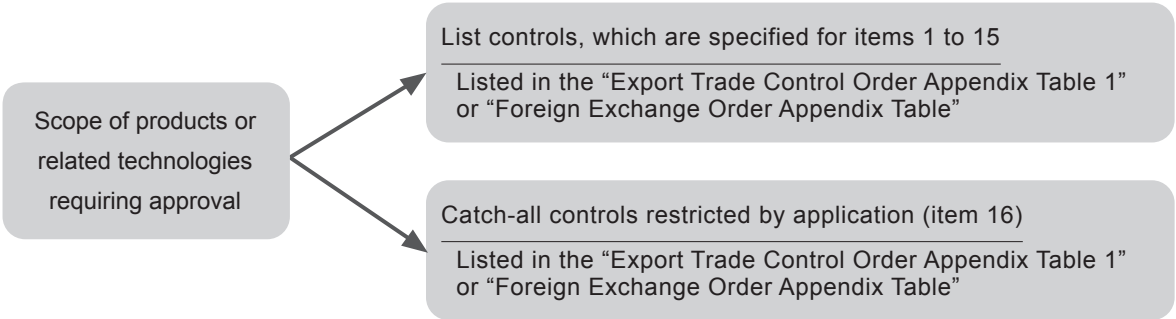

An application for approval is received by the Security Export Licensing Division of the Ministry of Economy, Trade and Industry or local bureaus of the Ministry of Economy, Trade and Industry.

2 Products and related technologies in this catalog

The products and related technologies in this catalog are subject to the list controls of the Foreign Exchange and Foreign Trade Control Law.
For information on the products or related technologies subject to the list controls of the Foreign Exchange and Foreign Trade Control Law, refer to the applicable product page.
If exporting or providing products or related technologies that fall under the list controls, be sure to obtain export permission under the Foreign Exchange and Foreign Trade Control Law.
In addition, when exporting or providing the products or related technologies in this catalog, ensure that they are not used for arms or weapons.

3 Contact

Contact your local CKD Sales Office for information on the Security Trade Control of products and related technologies in this catalog.

Fine System Components

Safety Precautions

Be sure to read this section before use.

Design / Selection

1. Checking the specifications

WARNING

■ This product cannot be used as an emergency shut-off valve. The valves listed in this catalog are not designed as valves to ensure safety such as emergency cutoff valves. When using in such a system, always take separate measures that will ensure safety.

■ Incorrect component selection and handling can cause problems not only in this product, but also to your system. For equipment selection and handling, it is the customer's responsibility to check the specifications of this product and the compatibility with your system before use.

■ Working fluids
Check with a scientific expert regarding the compatibility of the working fluid with the product material in order to determine usability. Stainless steel body cannot be used with acidic fluids.

■ Fluid temperature
Use within the specified working fluid temperature range.

■ Fluid pressure range
Use the products within the fluid pressure given in the specifications listed in this catalog.

■ Ambient environment
①Check the compatibility of product component materials and ambient atmosphere. (Do not use this product in a corrosive or explosive atmosphere.)
②Do not allow fluid to come into contact with the product body.
③Use this product within the ambient temperature range.
④Do not use this product outdoors or in a place where it can be subjected to vibration or impact, or near a heat source.

2. Design

WARNING

■ When using a working fluid that may be hazardous to the body, isolate the valve so that no one can approach it.

■ Liquid ring
When the valve opens and closes, the diaphragm moves up and down, which accordingly causes the flow path capacity to change inside the valve. For this reason, as the fluid is an incompressible fluid (liquid), extreme pressures will be created in the valve when operating under conditions that seal the fluid in the valve (liquid ring). In this case, install a release valve on the primary or secondary side of the valve, preventing a liquid ring circuit from forming.

■ Securing maintenance space
Secure sufficient space for maintenance and inspection.

■ The Rc thread is piped according to "For Rc threads" on the following page (1), but the screw-in part may leak due to thermal cycling. When using the product under these conditions, select the integrated fitting-type.

3. With sensor option

WARNING

■ Application, load current, voltage, temperature, impact, environment, etc., outside the specifications will result in damage or operation faults. Use the device as instructed in the specifications.

■ Never use this product in an explosive gas atmosphere. Option with sensor does not have an explosive-proof structure. Never use in an explosive gas atmosphere as explosions or fires could result.

■ It cannot be used in high steam and dusty environments or in direct contact with water, chemicals, etc., or in atmospheres of corrosive gases.

■ Take care when using this product for an interlock circuit.
When using the option with sensor for an interlock signal requiring high reliability, provide a double interlock by installing a mechanical protective function or other sensor as a guard if problems occur. Regularly inspect and confirm that the interlock activates correctly.

■ Pay attention to the contact capacity.
Do not use a load that exceeds the sensor's max. contact capacity. This may lead to failure.

■ Pay attention to the protection circuit.
● When an inductive load (relay or solenoid valve) is connected, a surge voltage is generated when the sensor is turned OFF. Provide a protection circuit.
● When a capacious load (capacitor) is connected, starting current is generated when the sensor is turned ON. Provide a protection circuit.
● If the wiring length increases, the wiring capacity will be reached and a rush current will occur, damaging the sensor or shortening the service life. Provide a protection circuit.

■ Do not use this product in surge generating areas.
If there are devices and components (solenoid lifters, high frequency induction furnace, motors, etc.) around the sensor that generate a large surge, consider surge protection of the source as it may lead to deterioration or damage of the sensor internal circuit element.

CAUTION

■ Be careful of the internal voltage drop caused by serial connection.
● When serially connecting several sensors, the sensor voltage drop is the total voltage drop of all connected sensors. Check load specifications and determine the number of connections so as not to exceed the maximum load current of the sensor.

Mounting, Installation and Adjustment

1. Mounting

WARNING

■ Incorrect mounting or piping will result in product trouble, may cause trouble in the user's system, and may result in death or serious injury. The user is responsible for making sure that the operator has read the instruction manual and fully comprehends the system, fluid characteristics, compatibility between the fluid and related products, and other safety-related information.

CAUTION

■ After installation, check for leaks from pipes and that the product is installed correctly.

2. Piping

WARNING

■ Always flush the piping before installing the valve. Debris or foreign matter in the fluid may prevent the valve from functioning correctly. When there is contamination, install a filter on the primary side of the valve according to the circuit used.

■ For products that have an arrow displayed, ensure that the piping is performed so that the flow of the fluid is consistent with the direction of the arrow.

■ When piping, do not apply tension, compression, bending or other forces to the valve body from the piping.

■ For NC and NO, ports that are not pressurized with operating pressure should be open to the atmosphere. If direct intake and exhaust from the valve should be avoided due to reasons such as ambient atmospheric conditions or airborne dirt, remove the set screw and install piping in order to allow intake and exhaust elsewhere as preferable.

■ Use the driving solenoid valve connected to the drive unit according to the specifications or applications.

CAUTION

■ For information on PFA fitting tubes, refer to the latest instruction manuals issued by fitting manufacturers and install accordingly. Since fitting installation requires dedicated installation jigs, contact fitting manufacturers separately. Distance to adjacent fitting is short for AMG, GAMD, and GMMD. Note that installation may be difficult with ordinary tools. Contact CKD as fitting manufacturers' dedicated installation jigs may not be usable.

■ When installing the union fitting, make sure that the O-ring is inserted in the groove of the body and firmly tighten until the O ring collapses. If it is not securely tightened, fluid may leak outside, which could be dangerous.

■ The PFA pipe for welding must be welded by a specialist in PFA pipe welding.

■ When installing piping, avoid any application of stress on the valve body, such as bending, tension, or compression. Also, make sure that the pipes' support position and method do not produce piping load on the valve.

■ Fix the equipment to the mounting plate in addition to using fittings as support when installing a valve.

■ To install the Rc thread section, follow the procedure below.

(1) For Rc threads

①Wind PTFE seal tape three or four times around a fitting conforming to a JIS B 0203 pipe taper thread.
②Tighten at the following tightening torque.

Port size	PFA fitting	PVC fitting
Rc1/8	0.5 to 0.8	—
Rc3/8	1.0 to 1.5	—
Rc1/2	1.5 to 2.0	2.0 to 2.5
Rc3/4	2.0 to 2.5	2.5 to 3.0
Rc1	2.5 to 3.5	3.0 to 4.0

(N·m)

(2) Operating port

As port cracking and screw damage may result, tighten with 0.4 to 0.6 N·m. For AMD3/4/5*2, AMG3/4/502 or GAMD3/4/5*2, when using metal and PPS fittings, select a model with reinforcing ring (refer to applicable model pages). Do not use metal fittings for AMD4/5/61H and AMD3/51M.

Safety Precautions

Be sure to read this section before use.

Mounting, Installation and Adjustment

3. With sensor option

CAUTION

■ Do not drop or apply impact.
Do not drop, bump or apply excessive impact when handling. Even if the body is not damaged, sensor components could break or malfunction.

■ Do not carry the valve body by the sensor's lead wire.
Never do this: it not only causes disconnection of lead wires, but since stress is applied to the internal sensor, it may also damage the sensor internal element.

■ Do not wire together with power lines or high voltage lines.
Avoid the use of parallel wiring or wiring in the same conduit as that of power lines or high voltage lines. The control circuit containing the sensor could malfunction due to noise.

■ Do not short-circuit the load.
If turned ON in a state of load short-circuit, excess current will flow and the sensor will be damaged.

■ Pay attention to the lead wire connection.
Turn OFF power to the device in the electric circuit to be connected before starting wiring. If operated while the power is turned ON, it may cause accidents due to electric shock or unpredicted operation.

■ Check the power supply fluctuations so that the power supply input does not exceed the rating.

■ When using a commercially available switching regulator on the power supply, be sure to ground the power supply frame ground (F.G.) terminal.

■ When using a component (switching regulator, inverter motor, etc.) that could generate noise around the component, be sure to ground the sensor frame ground (F.G.) terminal.

4. Electric needle valve MNV series

WARNING

■ Note that the product surface will be hot when used under high temperature conditions. Touching it directly may result in burns.

■ When the valve operates, a tiny amount of permeated gas from the chemical liquid will be released though the vent hole on the side of the cover. Do not put your face or hands near the vent hole. When touching the valve, use corrosion-resistant gloves and do not touch with bare hands.

■ Be sure to observe the setting range (0 to 600 step).

■ Do not use the product so as to continue step-out of the motor. Doing so may result in malfunctions or breakdowns. When using as feedback control, durability may be affected depending on the conditions. Check the operation with the actual device before use.

Use / Maintenance

1. Before use

⚠ WARNING

■ Use this product below the max. working pressure and max. working pressure range.

⚠ CAUTION

■ Do not disassemble.

■ Do not apply strong impact to the product by dropping it, etc. This may cause malfunction or damage to the product.

■ Check with a chemical expert regarding the compatibility of the working fluid with the product material in order to determine usability.

- Fluids that contain particles, such as slurry and UV curing agent, or could solidify or jell may affect performance.
- If the fluid is highly absorbable, such as liquid containing a surfactant or stripping solution, the fluid may permeate through the parts.

Conduct periodic inspections, and if there is any abnormality, take necessary measures such as replacing the parts.

■ When using gases such as N_2 gas and air, valve seat leakage up to 1 cm^3/min (at pneumatic pressure) may occur.

■ Rapid changes in fluid temperature may cause the valve seat to warp unevenly, leading to valve seat leakage.

■ As for operating air, use air or inert gas passed through a filter with a filtration rating of 5 μm or more.

■ Since it is precision cleaned, clean packed and delivered assuming installation in a clean room, handle with care.

■ Do not over-tighten the flow rate/bypass adjustment knob.

■ Do not use valves as a footing or place any heavy objects on top of the valves.

■ If the product has been out of use for a long period, perform a test run before starting the actual operation.

■ The valve operating time may change due to the piping conditions, pressure conditions, operation intervals and the like of the operating air. Be sure to confirm that there are no problems before using the valve after it is installed on the actual machine.

■ Turbulent flow occurs on the secondary side of the valve. When installing a device that requires laminar flow, e.g. a flow rate meter, on the secondary side of the valve, make sure to keep enough distance between the valve and the device so that the device is not affected by turbulent flow.

■ Never attempt to disassemble the product. It is very dangerous, as some products include high-load springs.

■ Do not allow fluid to come into contact with the product body.

■ Static electricity

Fluororesin is easily charged and becomes further charged by flowing gas or liquids. As static electricity may cause external leakage or ignition, be sure to take measures to remove static electricity to the extent possible.

2. With sensor option

⚠ WARNING

■ Do not apply overcurrent.

If overcurrent flows to the sensor due to a load short-circuit, etc., the sensor will be damaged with a risk of ignition. Provide an overcurrent protection circuit, such as a fuse, for the output wire and power cable as needed.

⚠ CAUTION

■ Pay attention to reverse currents caused by disconnected wires and wiring resistance.

- If other components, including a sensor, are connected to the same power supply as the sensor, and the output wire and power cable negative (-) side are short-circuited to check the operation of the control panel input unit, or if the power cable negative (-) side is disconnected, reverse current could flow to the sensor's output circuit and cause damage.

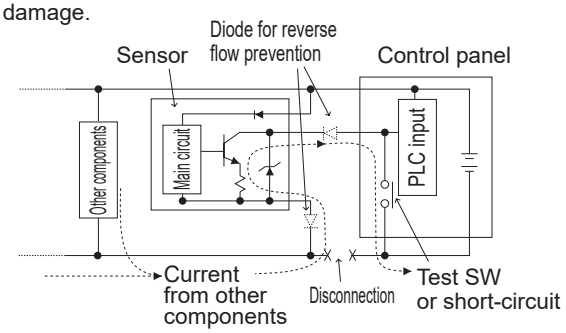

- Take the following measures to prevent damage caused by reverse current:

①Avoid centralizing current at the power cable, especially the minus side power cable, and use as thick a cable as possible.

②Limit the number of components connected to the same power source as the sensor.

③Insert a diode parallel to the sensor's output line to prevent reverse current.

④Insert a diode parallel to the sensor power wire's negative (-) side to prevent reverse current.

Fine System Components

Safety Precautions

Be sure to read this section before use.

Use / Maintenance

■ Pay attention to surge current flow-around.

●When sensor power is shared with an inductive load that generates surges such as a solenoid valve or relay, if the circuit is cut off while the inductive load is functioning, surge current could enter the output circuit and cause damage depending on where the surge absorber is installed.

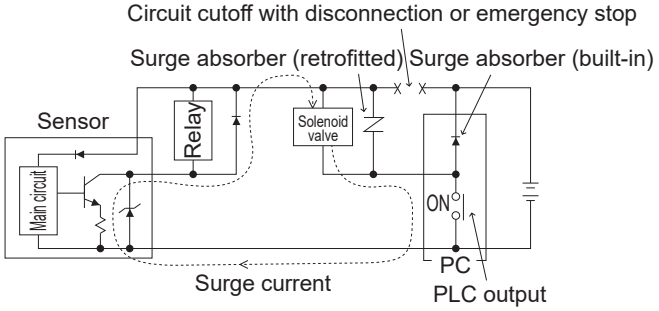

●Take the measures below to prevent damage from sneak surge current.

①Separate power supplies for output systems that are inductive loads, such as solenoid valves and relays, from input systems, such as sensors.

②If a separate power supply cannot be used, directly install a surge absorption element for all inductive loads. Consider that the surge absorber connected to the PLC, etc., protects only the individual device.

③Insert a diode parallel to the sensor's output line to prevent reverse current.

④Connect a surge absorber to places on the power wiring shown in the figure below, as a measure against disconnections in unspecified areas.

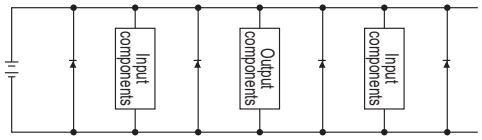

When devices are joined to a connector, the output circuit could be damaged by the above if the connector is disconnected while power is ON. Turn power OFF before connecting or disconnecting the connector.

3. Air operated manual valve for chemical liquids AMD/MMD Series

CAUTION

■ When adjusting the flow rate of the AMD Series or MMD Series, vibration or flow rate fluctuation may occur depending on the working conditions such as fluid temperature, differential pressure, opening degree, etc. Confirm that the product is acceptable under actual working conditions before use.

Use the MMD**2 Series in the fully closed or fully open position. It cannot be used in the intermediate position. Tighten the MMD**2 Series knob within the torque range shown in the table below. If it is not tightened properly, the knob may rotate due to vibration of the pump.

Model No.	MMD302	MMD402	MMD502
Knob tightening torque	0.8 to 1.5	1.0 to 1.8	1.5 to 2.5

(N·m)

4. Air operated valve for chemical liquids AMD/GAMD Series

CAUTION

■ In the AMD/GAMD Series, water hammer and vibration may occur in certain fluid pressure conditions. In most cases, this can be resolved by adjusting the open-close speed using a speed controller, etc. If a problem persists, review and revise the fluid pressure and piping conditions.

5. Air operated manual valve for high pressure chemical liquids AMD*1H/MMD*0H Series
Air operated manual valve for chemical liquids AMD*1M/MMD*0M Series

CAUTION

■ When collecting permeated gas from the diaphragm or detecting leakage, remove the set screw from the detection port and use it as the piping port. If the piping is made of fluororesin, tighten it by 0.4 N·m or less. Use the MMD*0H or MMD50M Series either fully closed or fully opened. The intermediate position cannot be used.

6. Manual valve for chemical liquids MMD Part 3RN/GMMD Part 3RN Series

CAUTION

■ When operating the valve, turn the knob until it spins loosely (there should hear a click). If you hold the lock ring while turning the knob, it will not spin; valve seat deterioration or product damage may be caused by over tightening.

■ If the knob spins loosely but the valve fails to close or open, insert a screwdriver or similar tool into the hole on the knob side and turn the knob. If the green indicator inside the hole is visible, forced operation is possible. If the green indicator is not visible from the hole, turn the knob to adjust the position.

Use / Maintenance

- The structure uses knob rotation for sealing, so that if the valve is left closed for long periods, valve seat leakage may occur. When temperature changes take place, retighten the knob.
- Vibration or flow rate fluctuation may occur depending on the working conditions such as fluid temperature, differential pressure, or opening. Confirm that the product is acceptable under actual working conditions before use. For precise flow rate adjustment, select the FMD Series or Fine flow rate adjusting valve (LYX).
- When transporting valves with misoperation prevention covers attached, hold the entire valve rather than the misoperation cover alone.
- Attach the misoperation prevention cover with the lock ring lowered. This can prevent misoperation and erroneous knob operation.
- When mounting the misoperation prevention cover to prevent knob operation, use a padlock or similar to keep it locked.
- Note that the misoperation prevention cover cannot be used with the GMMD Series.

7. Fine regulator PMM/PYM/PMP Series

⚠ CAUTION

- In the PMM, PYM or PMP Series, vibration may occur due to fluctuations in fluid pressure, flow rate, or supply pressure or to piping conditions, which may affect the product life. If this occurs, review and revise the fluid pressure and flow rate conditions.
- Since the regulator operates with a small opening, allowing a fluid mixed with foreign matter to flow may damage the valve seat and cause the performance to deteriorate. We recommend installing a filter on the primary side of the regulator when there is a possibility of foreign matter contamination.
- When the set output pressure of regulator is exceeded, if damage and malfunction of devices at the secondary side could be caused, always provide a safety device.
- In the PMP Series, bubbles may be generated in the liquid by the pilot air passing through the diaphragm membrane. We recommend not to keep pressurizing the pilot air when not in use.
- When adjusting the flow rate, install a needle valve or a needle valve, etc., on the secondary side of the regulator.

8. Maintenance and Inspection

⚠ DANGER

- When replacing the valve, thoroughly flush the remaining chemical liquid with pure water or air so that it does not affect the surrounding components and humans. While the upper side of the diaphragm (cylinder side) does not come into contact with the fluid, it may be exposed to chemical atmosphere due to gas permeation from the thin film part. For your safety, follow the precautions below:
  ①Since a small amount of transmitted gas is released from the breathing hole on the cylinder side by the operation of the valve, do not let anyone near the breathing hole during valve operation.
  ②In addition, crystals may adhere to the breathing hole and its vicinity.
  ③When touching the valve, use corrosion-resistant gloves and do not touch with bare hands.
- Valves used with chemical liquids may have chemical atmosphere remaining between the actuator and the diaphragm. Never attempt to disassemble the product. If disassembly is necessary, contact CKD or a distributor.
- Perform the following periodic inspection once or twice a year to ensure that the valve is achieving optimal functionality.
  ①Inspection for leakage to the valve exterior
  ②Inspection for leakage from fitting
  ③Check for abnormalities such as discoloration, deformation, corrosion of the components

⚠ WARNING

- Read the instruction manual thoroughly and make sure you understand the content before performing maintenance.
- Always drain the operating air and fluid before performing maintenance.
- Before starting maintenance or inspection, read the material safety data sheet (SDS) for the chemical liquid and wear the necessary protective gear.
- When using chemical liquids such as high permeability hydrochloric acid, hydrofluoric acid, or nitric acid for long periods, it can lead to deterioration of parts other than the wetted parts and accidents such as external leakage due to transmission gas. Check for abnormalities such as discoloration, deformation, or corrosion of the components once or twice a year as periodic inspection for safety.

⚠ CAUTION

- When replacing a product, always replace it with a product with the same model No. Specifications may differ even when the appearance is the same.
- Store unused products in a location where they are not exposed to direct sunlight or high temperatures. When handling the product, do not apply impact or damage it by throwing, dropping, or allowing it to catch on something.

Air operated valve

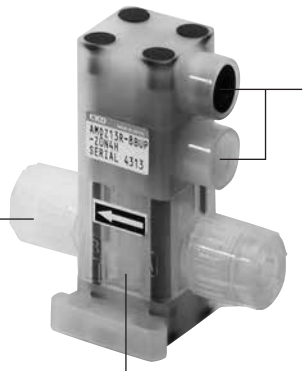

⚠ Safety precautions	Intro Page 9
Part3R Series	
AMD**3R	2
AMG*03R	10
GAMD**3R	14
Part2 Series	
AMD0*2	20
AMD3/4/5*2	24
AMD3/4/5 *2 (stainless steel body)	36
AMG3/4/502	48
GAMD3/4/5*2	56
AMD**2/AMG*02/GAMD**2 (high pressure specification)	64
Part1 Series (compact)	
AMDZ*, AMD0*	66
AMGZ0, AMG00	72
High pressure	
AMD*1H	76
Metal-free	
AMD*1M	82
Large bore size	
LYX-1380	86
PVC	
AMD*1L	88
For liquid discharge	
LYX-08*	
LYX-14*	96
LYX-088*	

The new standard!

Air operated valve for chemical liquids

AMDZ*3R
AMD0*3R
AMD3*3R
AMD4*3R
AMD5*3R

RoHS

Working pressure range extended

Common operating pressure for equal working pressure at ports A and B.

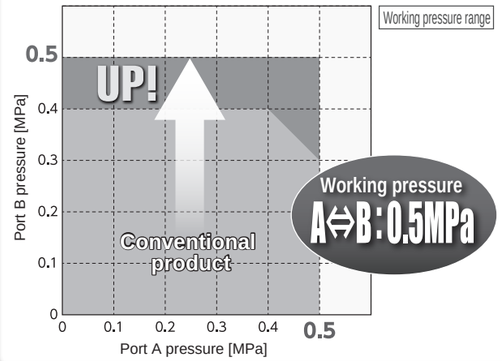

Supports a variety of chemical liquids as standard

The use of highly chemically resistant polyvinylidene fluororesin (PVDF) for the actuator enables support for a wide range of applications as standard, regardless of acidity or alkalinity.

Standardized

Liquids	General/others	Hydrofluoric acid, nitric acid	Aqueous ammonia
Conventional product (Part 2)	Standard specifications	P specs.	M specs.

AMD※※3R (Part 3R)	Standard specifications

Expanded working fluid temperature range for standard products

- Common operating pressure
- Common fluid temperature

NC/NO* common 0.35 to 0.5MPa

All models 120℃

* AMD0/3/4/5-* 3R Series

Size variation

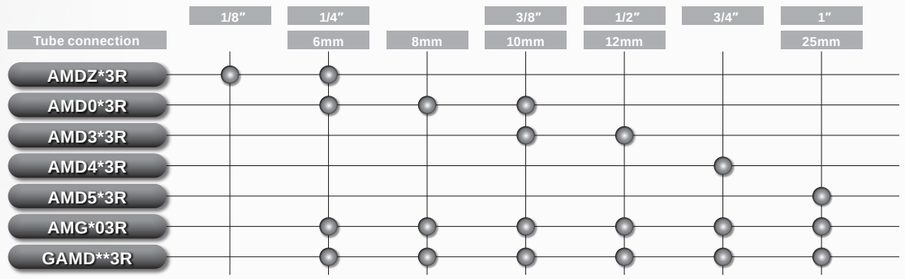

Actuator option

With indicator

Indicator showing solenoid open/close state at a glance equipped as standard.

With flow rate adjustment

Flow rate can be freely adjusted.

With sensor

Optional sensor available to confirm valve open/close state with signals

Various fittings supported

Nippon Pillar Packing Co.,Ltd. product Super 300 P Series

Flowell Co., Ltd. F-LOCK 60 Series

Mounting method

3 types of mounting methods

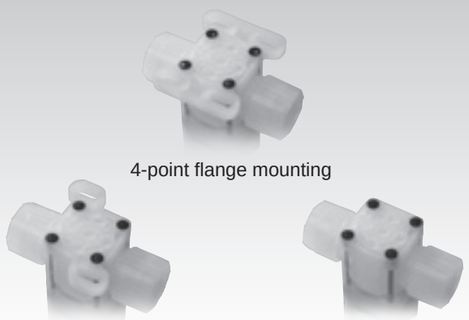

4-point flange mounting

Flange mounting

Bottom mounting

3-port valve

AMG Series

3-port valve compatible.

Manifold

GAMD Series

Manifold keeps it compact. Mix manifold* is also supported.

*Contact CKD for details.

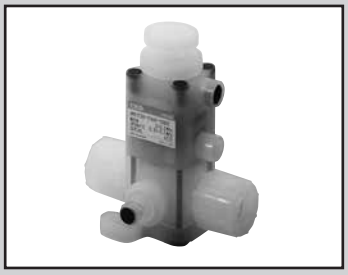

Air operated valve for chemical liquids

AMD**3R Series

Export controlled items

*Eligibility: AMD4*3R, AMD5*3R

RoHS CAD

Specifications

Item \ Size		AMDZ*3R □22	AMD0*3R □25	AMD3*3R □36	AMD4*3R □46	AMD5*3R □60
Working fluid		Chemical liquids, pure water, N_2 gas, air				
Fluid temperature	°C	5 to 120 (5 to 90 for body with bypass) *1, *2				
Proof pressure	MPa	1.0				
Working pressure range	(A→B) MPa	0 to 0.5 (Refer to table below for body with bypass)				
	(B→A) MPa	0 to 0.5 (Refer to table below for body with bypass)				
Valve seat leakage	cm^3/min	0 (water pressure)				
Back pressure	MPa	0 to 0.5 (Refer to table below for body with bypass)				
Ambient temperature	°C	0 to 60 (0 to 50 for type with sensor)				
Frequency		30 cycles/min. or less			20 cycle/min. or less	
Mounting orientation		Unrestricted				
Connection		Super 300 Pillar fitting P Series F-LOCK 60 Series				
Operating section	Operating pressure MPa	NC/NO:0.4 to 0.5 Double acting: 0.3 to 0.4	NC/NO:0.35 to 0.5 Double acting: 0.3 to 0.4			
	Port connection	Rc 1/8				
Weight	Normal body kg	0.07	0.1	0.21	0.48	0.91
	Body with bypass kg	-	-	0.23	0.49	1

*1: For hydrofluoric acid or chemical liquids containing hydrofluoric acid, use within the range of 5 to 80°C.
*2: 5 to 100°C if the connection is F-LOCK 60 Series.
*3: Refer to pages 8 to 9 for Cv and flow characteristics.

Internal structure and parts list

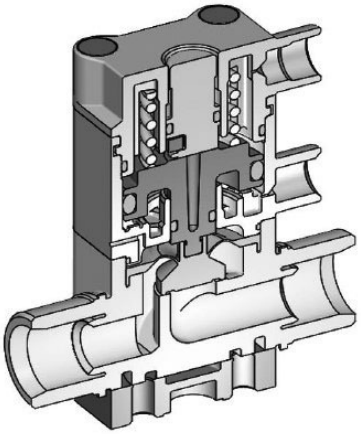

Part name	Material
Body (wetted parts)	PFA or PTFE
Diaphragm (wetted parts)	PTFE
Actuator	PVDF
O-ring	FEPM, FKM
Metal parts	Stainless steel (fluoro resin coating)
Mounting plate	PVDF

Working pressure

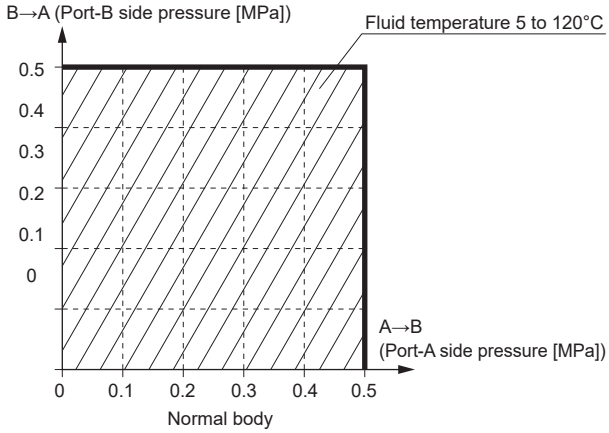

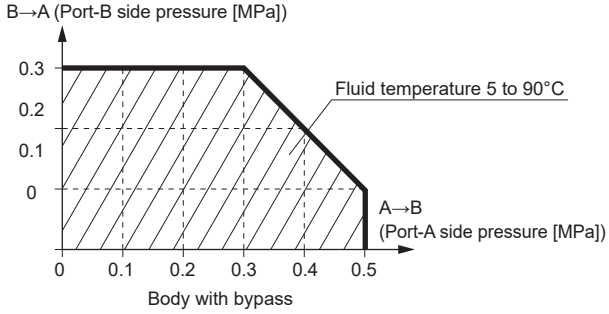

Always read the precautions on Intro Pages 7 to 14 before use.

How to order

AMDZ / AMD0 / AMD3 / AMD4 / AMD5 — 1 — 3R - 8BU — P - Z0 — N — 4 — H

Model No.

❶ Actuation

❷ Connection size

❸ Connection

❹ Actuator option

❺ Body option

❻ Operating port direction

❼ Mounting method

Code	Description
❶ Actuation	
1	NC
2	NO
3	Double acting

❷ Connection size		Selectable models				
Metric	**Tube size**	**AMDZ**	**AMD0**	**AMD3**	**AMD4**	**AMD5**
3U	ø3×ø2	●				
6U	ø6 x ø4	●	●			
8U	ø8 x ø6		●			
10U	ø10 x ø8		●	●		
12U	ø12 x ø10			●		
25U	ø25×ø22					●
Inching	**Tube size**	**AMDZ**	**AMD0**	**AMD3**	**AMD4**	**AMD5**
6BU	1/8"×0.086"	●				
8BU	1/4"×5/32"	●	●			
10BU	3/8"×1/4"		●	●		
15BU	1/2"×3/8"			●		
20BU	3/4"×5/8"				●	
25BU	1"×7/8"					●

❸ Connection	
P	Super 300 Pillar fitting P Series
R	F-LOCK 60 Series

❹ Actuator option			
Z0	ON/OFF only (Note: Only AMDZ can be selected)		
00	ON/OFF only (with indicator)		
10	With flow rate adjustment		
With sensor	**Transistor**	**Cable direction**	**Cable length**
A1	NPN	Operating port side	1 m
A3			3 m
B1		Opposite side to operating port	1 m
B3			3 m
C1	PNP	Operating port side	1 m
D1		Opposite side to operating port	1 m

❺ Body option	
N	Normal body
B	Body with bypass (Note: AMDZ/AMD0 cannot be selected.)

❻ Operating port direction	
1	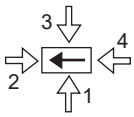 With valve viewed from above, ⬅ indicates fluid flow direction ⇦ and operating port direction.
2	
3	
4	

❼ Mounting method	
F	Flange mounting (Note: AMDZ cannot be selected.)
H	4-point flange mounting
X	Bottom mounting

⚠ Precautions for model No. selection

* Actuator option
  For AMDZ, 00 (with indicator ON/OFF) is not selectable, and 10 (with flow rate adjustment) is only NC. Models with sensors can be selected with AMD3/AMD4/AMD5.
* Body material
  Connection F-LOCK 60 Series is PTFE body.

Dimensions

● ON/OFF only type (indicator)

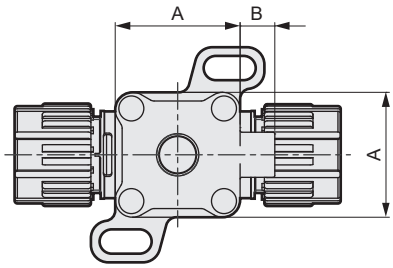

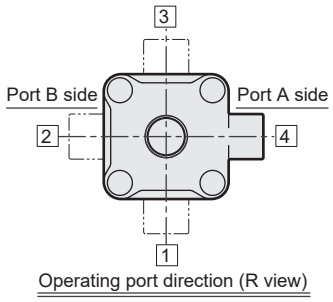

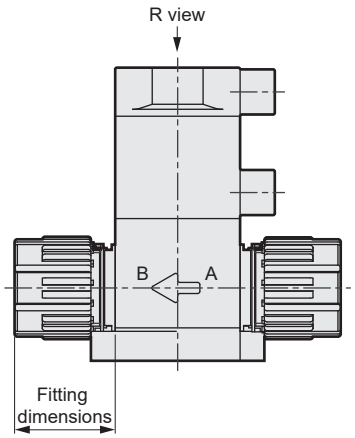

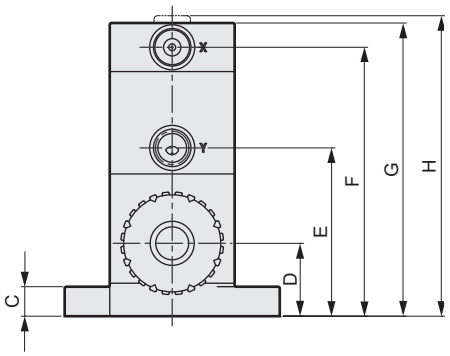

● With bypass

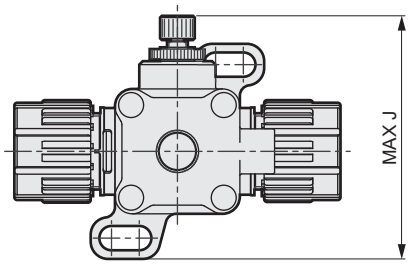

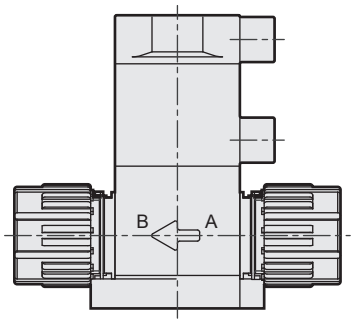

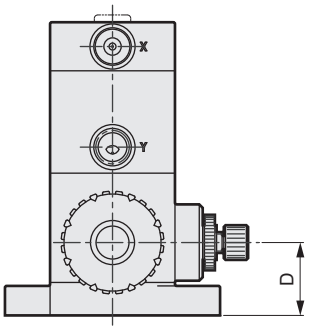

Model	A	B	C	D	E	F	G	H	J
AMDZ*3R	22	8	6	17	39	54	61	-	-
AMD0*3R	25	8	6	19	46	61	68	70	-
AMD3*3R	36	10	8.5	21	49	78	85	87	71
AMD4*3R	46	8	9	27	62	101	108	112	91
AMD5*3R	60	8	10	35	84	127	134	139	103

Connection S300 fitting	Fitting dimensions
3UP/6BUP	14
6UP/8BUP	19
8UP	22
10UP/10BUP	25
12UP/15BUP	29
20BUP	36
25UP/25BUP	43

Connection F60 fitting	Fitting dimensions
6UR	30
8BUR	31
8UR	31
10UR	37
10BUR	39
12UR	37
15BUR	39
20BUR	44
25UR	49.5
25BUR	51

Dimensions

● With flow rate adjustment

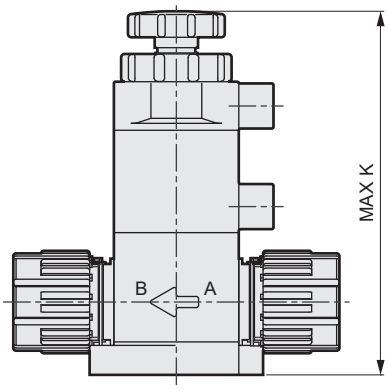

● With sensor

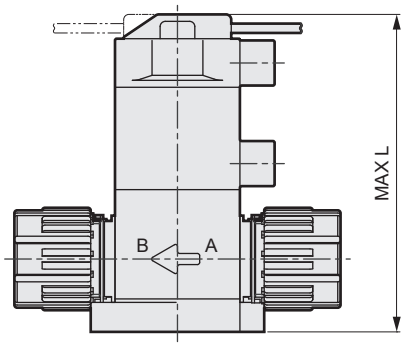

Model	K	L
AMDZ13R	77	-
AMD0*3R	86	-
AMD3*3R	108	92
AMD4*3R	131	115
AMD5*3R	166	141

● F Flange mounting (AMD 0/3/4)

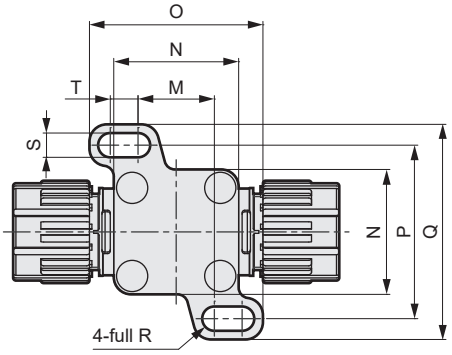

● F Flange mounting (AMD5)

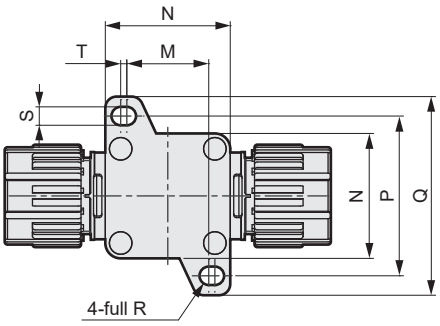

● H 4-point flange mounting

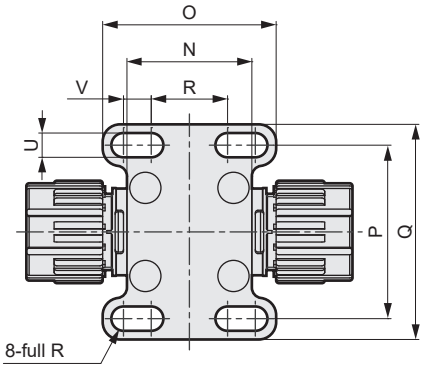

Model	M	N	O	P	Q	R	S	T	U	V
AMDZ*3R	-	22	27	30	36	12	-	-	4-3.5	4-4.5
AMD0*3R	15	25	30	33	39	15	2-3.5	2-4.5	4-3.5	4-4.5
AMD3*3R	22	36	50	50	62	22	2-7	2-8	4-7	4-8
AMD4*3R	28	46	66	64	82	28	2-9	2-11	4-9	4-11
AMD5*3R	40	61	78	78	97	40	2-9	2-3	4-9	4-11

● X Bottom mounting (AMDZ/O)

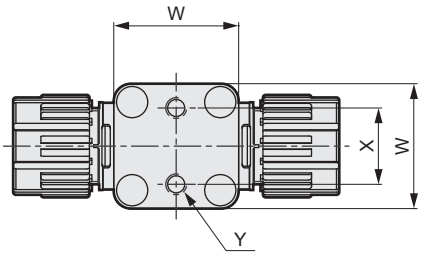

● X Bottom mounting (AMD 3/4/5)

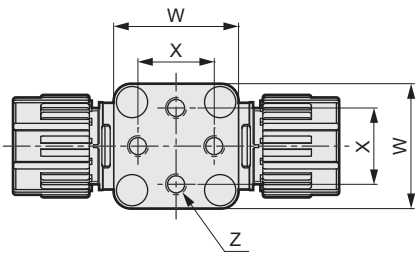

Model	W	X	Y	Z
AMDZ*3R	22	14±0.3	2-M6 depth 6	-
AMD0*3R	25	14±0.3	2-M6 depth 8	-
AMD3*3R	36	22±0.3	-	4-M6 depth 9
AMD4*3R	46	28±0.3	-	4-M8 depth 10
AMD5*3R	61	40±0.3	-	4-M8 depth 13

Connection and Cv of AMD**3R Series

AMD3*3R - 15BU P - 00N4F

- 15BU: Connection size
- P: Connection

Super 300 pillar fitting (connection code: P)

	Connection size	Connection	Applicable tube size	Selectable model sizes and Cv				
				AMDZ	AMD0	AMD3	AMD4	AMD5
Metric	3U	P	ø3 × ø2	0.07				
	6U	P	ø6 × ø4	0.25	0.34			
	8U	P	ø8 × ø6		0.64			
	10U	P	ø10 × ø8		0.8	1.25		
	12U	P	ø12 × ø10			1.8		
	25U	P	ø25 × ø22					8
Inch	6BU	P	1/8" × 0.086"	0.07				
	8BU	P	1/4" × 5/32"	0.25	0.34			
	10BU	P	3/8" × 1/4"		0.8	1.25		
	15BU	P	1/2" × 3/8"			1.8		
	20BU	P	3/4" × 5/8"				5	
	25BU	P	1" × 7/8"					8

F-LOCK 60 Series (connection code: R)

	Connection size	Connection	Applicable tube size	Selectable model sizes and Cv				
				AMDZ	AMD0	AMD3	AMD4	AMD5
Metric	6U	R	ø6 × ø4	0.22	0.28			
	8U	R	ø8 × ø6		0.64			
	10U	R	ø10 × ø8		0.7	1		
	12U	R	ø12 × ø10			1.6		
	25U	R	ø25 × ø22					8
Inch	8BU	R	1/4" × 5/32"	0.22	0.28			
	10BU	R	3/8" × 1/4"		0.64	0.7		
	15BU	R	1/2" × 3/8"			1.6		
	20BU	R	3/4" × 5/8"				4.5	
	25BU	R	1" × 7/8"					8

Flow characteristics

AMDZ*3R to AMD5*3R

●Flow characteristics (water)

Differential pressure - internal flow rate ( ): Cv

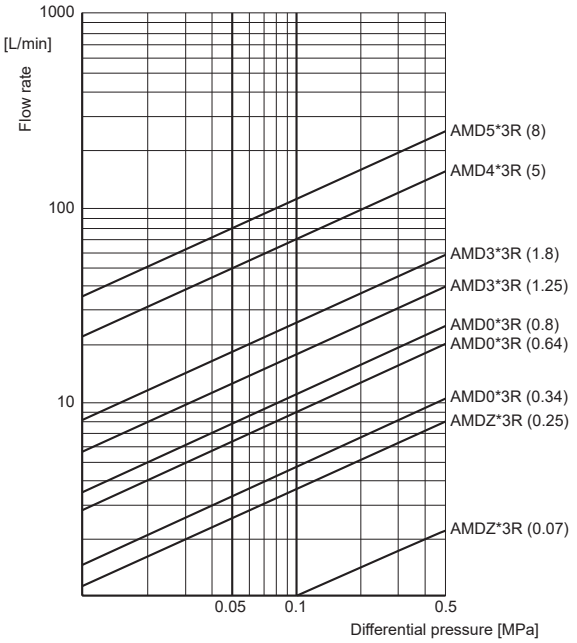

●Bypass Flow characteristics (water)

Differential pressure - internal flow rate ( ): Cv

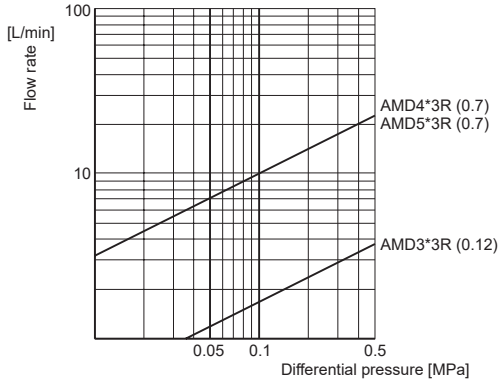

●With bypass (water)

Rotations - flow rate

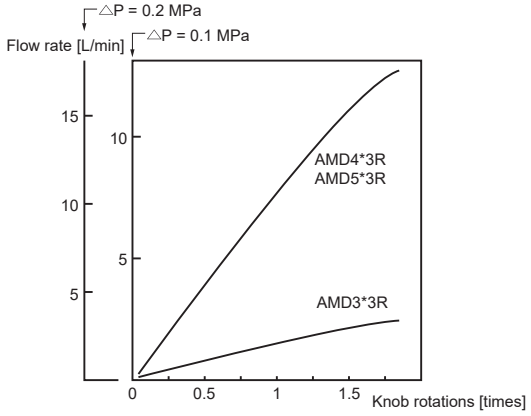

●With flow rate adjustment (water)

Rotations - flow rate

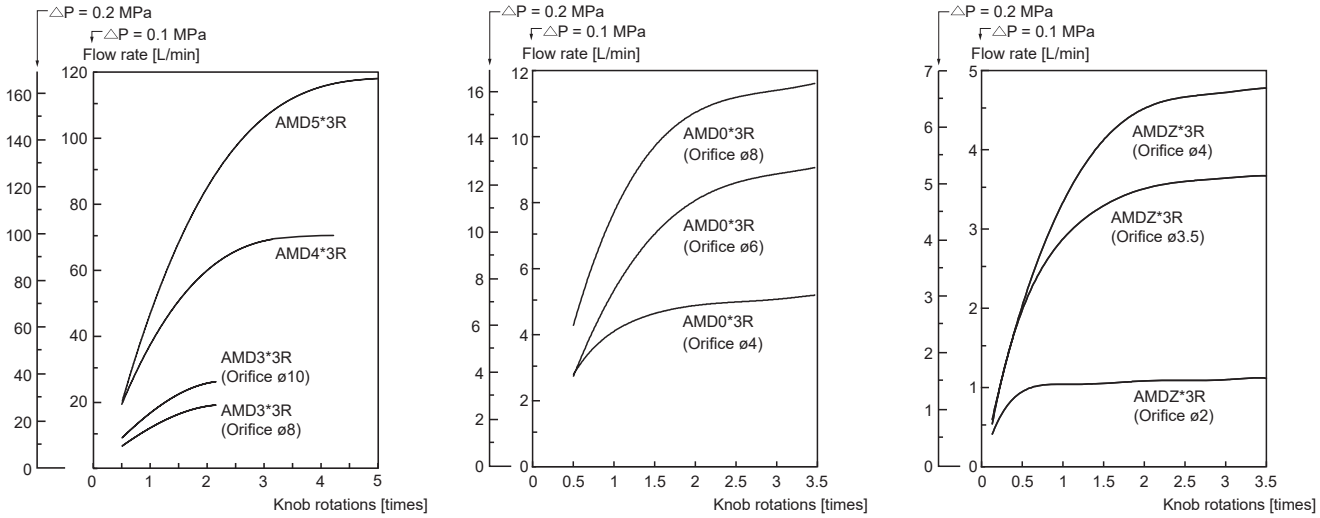

*1: Vibration and flow rate fluctuation may occur depending on the working conditions such as fluid temperature, differential pressure, and opening. Confirm that the product is acceptable under actual working conditions before use. For precise flow rate adjustment, select the FMD Series or Fine flow rate adjusting valve (LYX).

Air operated valve for chemical liquids (3-port valve)

AMG*03R Series

Made-to-order product

Export controlled items

*Eligibility: AMG403R, 503R

RoHS CAD

Specifications

Item \ Size		AMGZ03R	AMG003R	AMG303R	AMG403R	AMG503R
		□22	□25	□36	□46	□60
Working fluid		Chemical liquids, pure water, N_2 gas, air				
Fluid temperature °C		5 to 120 (*1, *2)				
Proof pressure MPa		1				
Working pressure range	(A→B) MPa	0 to 0.5				
	(B→A) MPa	0 to 0.5				
Valve seat leakage cm^3/min		0 (water pressure)				
Back pressure MPa		0 to 0.5				
Ambient temperature °C		0 to 60 (0 to 50 for type with sensor)				
Frequency		30 cycles/min. or less			20 cycle/min. or less	
Mounting orientation		Unrestricted				
Connection		Super 300 Pillar fitting P Series F-LOCK 60 Series				
Operating section	Operating pressure MPa	0.4 to 0.5	0.35 to 0.5			
	Port connection	Rc1/8				
Weight kg		0.13	0.22	0.5	1	2.1

*1: For hydrofluoric acid or chemical liquids containing hydrofluoric acid, use within the range of 5 to 80°C.
*2: 5 to 100°C if the connection is F-LOCK 60 Series.

Structure diagram and parts list

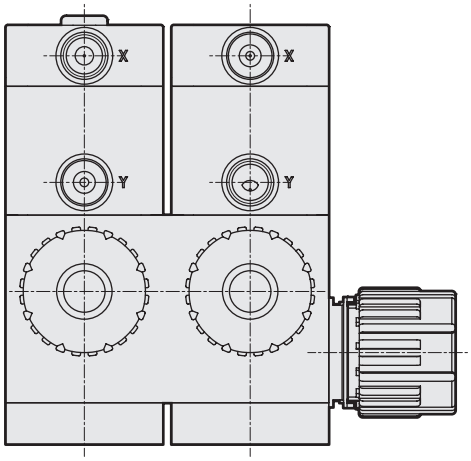

Part name	Material
Body (wetted parts)	PTFE
Diaphragm (wetted parts)	PTFE
Actuator	PVDF
O-ring	FEPM, FKM
Metal parts	Stainless steel (fluoro resin coating)
Mounting plate	PVDF

Working pressure

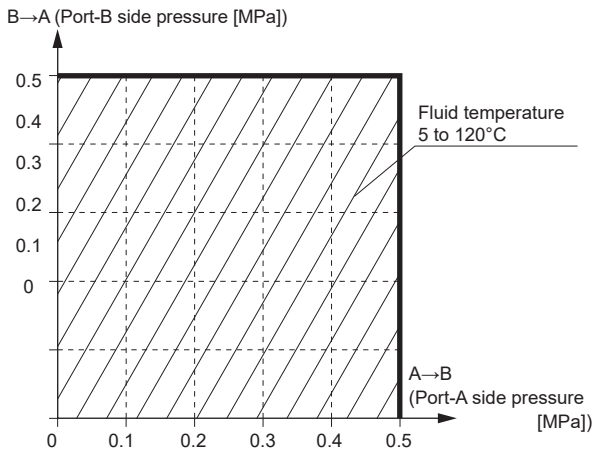

Always read the precautions on Intro Pages 7 to 14 before use.

How to order

AMGZ / AMG0 / AMG3 / AMG4 / AMG5 — 0 — 3R - 6U — P - Z0 — L

Model No. — ❶ Actuation — ❷ Connection size — ❸ Connection — ❹ Actuator option — ❺ Port A position

Code	Description
❶ Actuation	
0	NC + NO

❷ Connection size — Selectable models

Metric	Tube size	AMGZ	AMG0	AMG3	AMG4	AMG5
6U	ø6 x ø4	●	●			
8U	ø8 x ø6		●			
10U	ø10 x ø8		●	●		
12U	ø12 x ø10			●		
25U	ø25×ø22					●
Inching	**Tube size**	**AMGZ**	**AMG0**	**AMG3**	**AMG4**	**AMG5**
8BU	1/4"×5/32"	●	●			
10BU	3/8"×1/4"		●	●		
15BU	1/2"×3/8"			●		
20BU	3/4"×5/8"				●	
25BU	1"×7/8"					●

❸ Connection	
P	Super 300 Pillar fitting P Series
R	F-LOCK 60 Series

❹ Actuator option			
Z0	ON/OFF only (Note: Only AMGZ can make selection)		
00	ON/OFF only (with indicator)		
10	With flow rate adjustment		
With sensor	**Transistor**	**Cable direction**	**Cable length**
A1	NPN	Operating port side	1 m
A3			3 m
B1		Opposite side to operating port	1 m
B3			3 m
C1	PNP	Operating port side	1 m
D1		Opposite side to operating port	1 m

❺ Port A position	
L	Left
R	Right

⚠ Precautions for model No. selection

Note: Actuator option
00 (with ON/OFF indicator) / 10 (with flow rate adjustment) cannot be selected for AMGZ.
Model with sensor can be selected at AMG3/AMG4/AMG5.

Dimensions

*: NC and NO arrangements differ by port A position.
The valve close to the port A side is NC, while the other is NO.

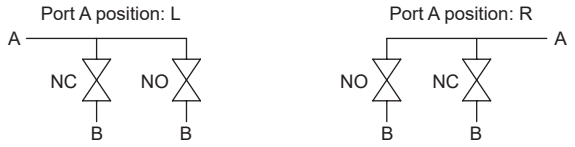

● ON/OFF only (with indicator)

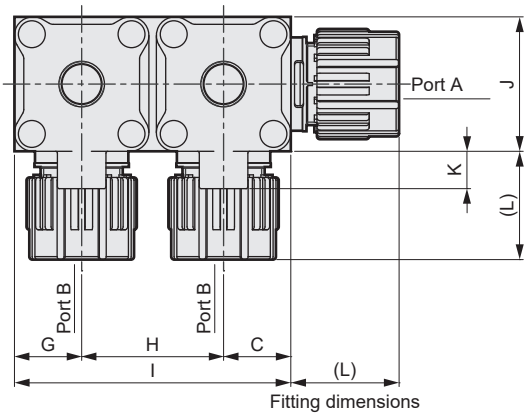

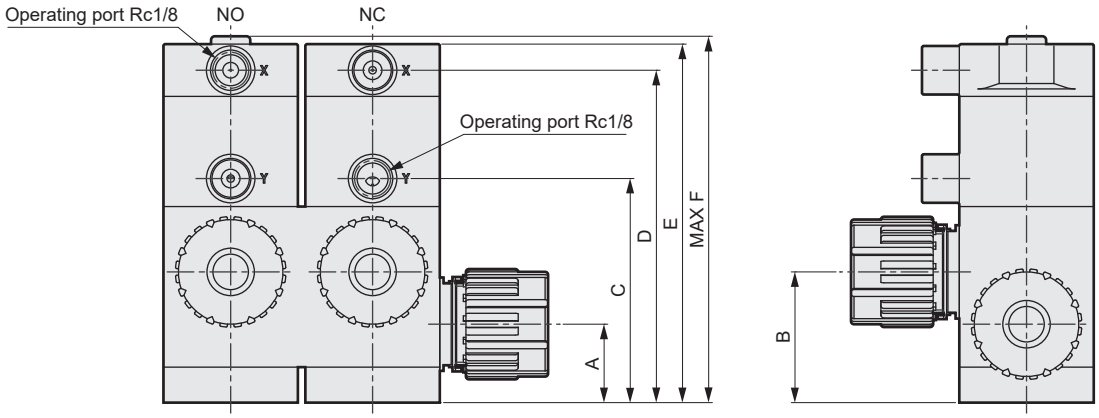

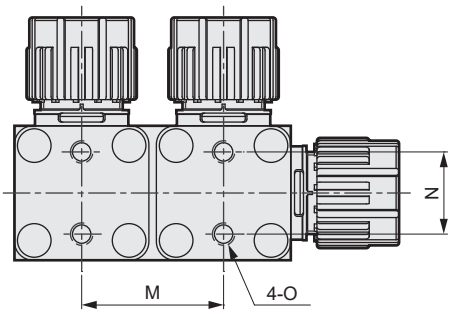

Dimensions

● With flow rate adjustment

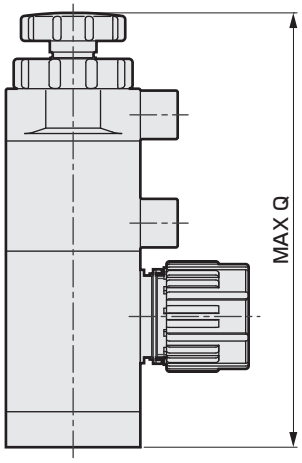

● With sensor

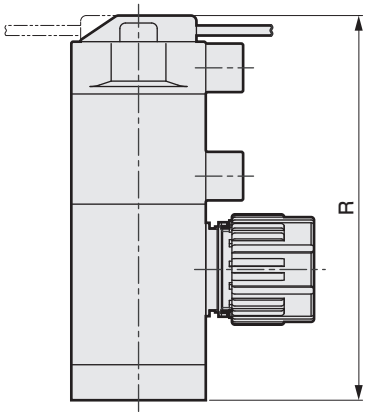

Model	A	B	C	D	E	F	G	H	I	J	K	Q	R
AMGZ03R	17	17	39	54	61	-	11	22.5	44.5	22	8	-	-
AMG003R	19	28.5	49	65	72	74	12.5	Table 1		25	8	90	-
AMG303R	21	35	60	89	96	98	18	38	74	36	10	119	103
AMG403R	27	46	78	118	125	128	23	48	94	46	8	148	132
AMG503R	35	60	99	142	149	154	30	62	122	60	8	181	156

Model	M	N	O
AMGZ03R	22.5±0.5	14±0.3	M6 depth 6
AMG003R	Table 1	14±0.3	M6 depth 8
AMG303R	38±0.3	22±0.3	M6 depth 9
AMG403R	48±0.4	28±0.3	M8 depth 10
AMG503R	62±0.4	40±0.3	M8 depth 13

Super 300P Series

Connection (connection size + type)	L
6UP, 8BUP	19
8UP	22
10UP, 10BUP	25
12UP, 15BUP	29
20BUP	36
25UP, 25BUP	43

F-LOCK 60 Series

Connection (connection size + type)	L
6UR	30
8BUR	31
8UR	31
10UR	37
10BUR	39
12UR	37
15BUR	39
20BUR	44
25UR	49.5
25BUR	51

Table 1

Connection (connection size + type)	H	I	M
6UP, 8BUP 8UP 6UR, 8BUR 8UR	26	51	26±0.3
10UP, 10BUP 10UR, 10BUR	31	56	31±0.3

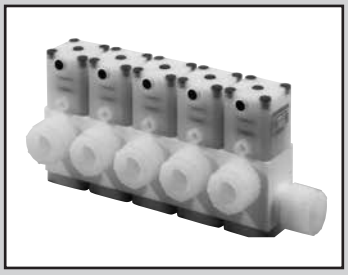

Air operated valve for chemical liquids (manifold/branch valve)

GAMD**3R Series

Made-to-order product

Export controlled items

*Eligibility: GAMD4*3R, 5*3R

RoHS CAD

Specifications

Item \ Size			GAMDZ*3R □22	GAMD0*3R □25	GAMD3*3R □36	GAMD4*3R □46	GAMD5*3R □60
Working fluid			Chemical liquids, pure water, N_2 gas, air				
Fluid temperature		°C	5 to 120 (*1, *2)				
Proof pressure		MPa	1				
Working pressure range	(A→B)	MPa	0 to 0.5				
	(B→A)	MPa	0 to 0.5				
Valve seat leakage		cm^3/min	0 (water pressure)				
Back pressure		MPa	0 to 0.5				
Ambient temperature		°C	0 to 60 (0 to 50 for type with sensor)				
Frequency			30 cycles/min. or less			20 cycle/min. or less	
Mounting orientation			Unrestricted				
Connection			Super 300 Pillar fitting P Series F-LOCK 60 Series				
Operating section	Operating pressure	MPa	NC/NO: 0.4 to 0.5 Double acting: 0.3 to 0.4	NC/NO: 0.35 to 0.5 Double acting: 0.3 to 0.4			
	Port connection		Rc1/8				
Weight		kg: One station	0.08	0.12	0.26	0.54	1.2
		kg: 2 stations	0.14	0.23	0.52	1.1	2.5
		kg: 3 stations	0.21	0.34	0.78	1.6	3.9
		kg: 4 stations	0.27	0.45	1	2.1	5.2
		kg: 5 stations	0.35	0.56	1.3	2.6	-

*1: For hydrofluoric acid or chemical liquids containing hydrofluoric acid, use within the range of 5 to 80°C.
*2: 5 to 100°C if the connection is F-LOCK 60 Series.

Structure diagram and parts list

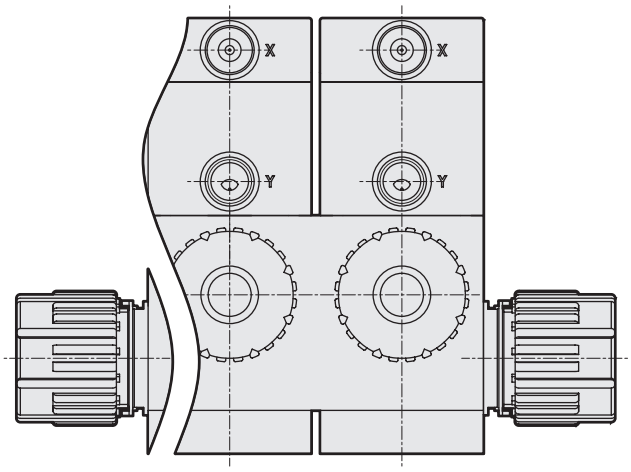

Part name	Material
Body (wetted parts)	PTFE
Diaphragm (wetted parts)	PTFE
Actuator	PVDF
O-ring	FEPM, FKM
Metal parts	Stainless steel (fluoro resin coating)
Mounting plate	PVDF

Working pressure

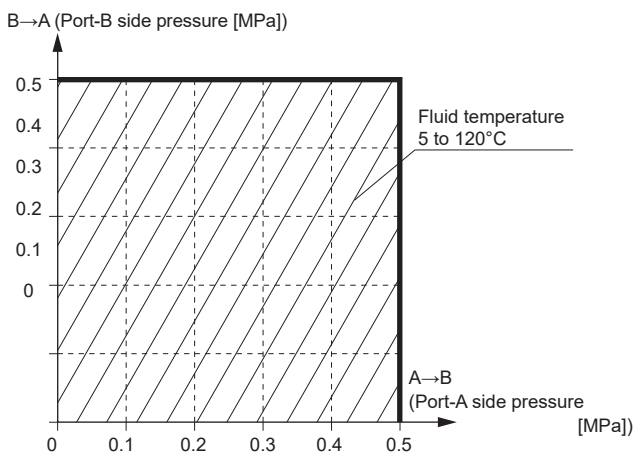

Always read the precautions on Intro Pages 7 to 14 before use.

How to order

GAMDZ / GAMD0 / GAMD3 / GAMD4 / GAMD5 — 1 — 3R - 6U — P - Z0 — 3 — W

Model No.

❶ Actuation

❷ Connection size

❸ Connection

❹ Actuator option

❺ Station No.

❻ Port A position

Code	Description
❶ Actuation	
1	NC
2	NO
3	Double acting

❷ Connection size		Selectable models				
Metric	Tube size	GAMDZ	GAMD0	GAMD3	GAMD4	GAMD5
6U	ø6 x ø4	●	●			
8U	ø8 x ø6		●			
10U	ø10 x ø8		●	●		
12U	ø12 x ø10			●		
25U	ø25×ø22					●
Inching	**Tube size**	**GAMDZ**	**GAMD0**	**GAMD3**	**GAMD4**	**GAMD5**
8BU	1/4"×5/32"	●	●			
10BU	3/8"×1/4"		●	●		
15BU	1/2"×3/8"			●		
20BU	3/4"×5/8"				●	
25BU	1"×7/8"					●

❸ Connection	
P	Super 300 Pillar fitting P Series
R	F-LOCK 60 Series

❹ Actuator option			
Z0	ON/OFF only (note: GAMDZ only can be selected)		
00	ON/OFF only (with indicator)		
10	With flow rate adjustment		
With sensor	**Transistor**	**Cable direction**	**Cable length**
A1	NPN	Operating port side	1 m
A3			3 m
B1		Opposite side to operating port	1 m
B3			3 m
C1	PNP	Operating port side	1 m
D1		Opposite side to operating port	1 m

❺ Station No.		Selectable models				
		GAMDZ	GAMD0	GAMD3	GAMD4	GAMD5
1	One station	●	●	●	●	●
2	2 stations	●	●	●	●	●
3	3 stations	●	●	●	●	●
4	4 stations	●	●	●	●	●
5	5 stations	●	●	●	●	

❻ Port A position	
L	Left
R	Right
W	Both sides

Precautions for model No. selection

* 00 (with ON/OFF indicator) and 10 (with flow rate adjustment) cannot be selected for the actuator option GAMDZ.
  Model with sensor can be selected with GAMD3/GAMD4/GAMD5.

Dimensions

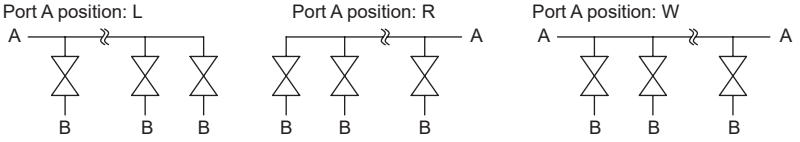

● ON/OFF only (with indicator)

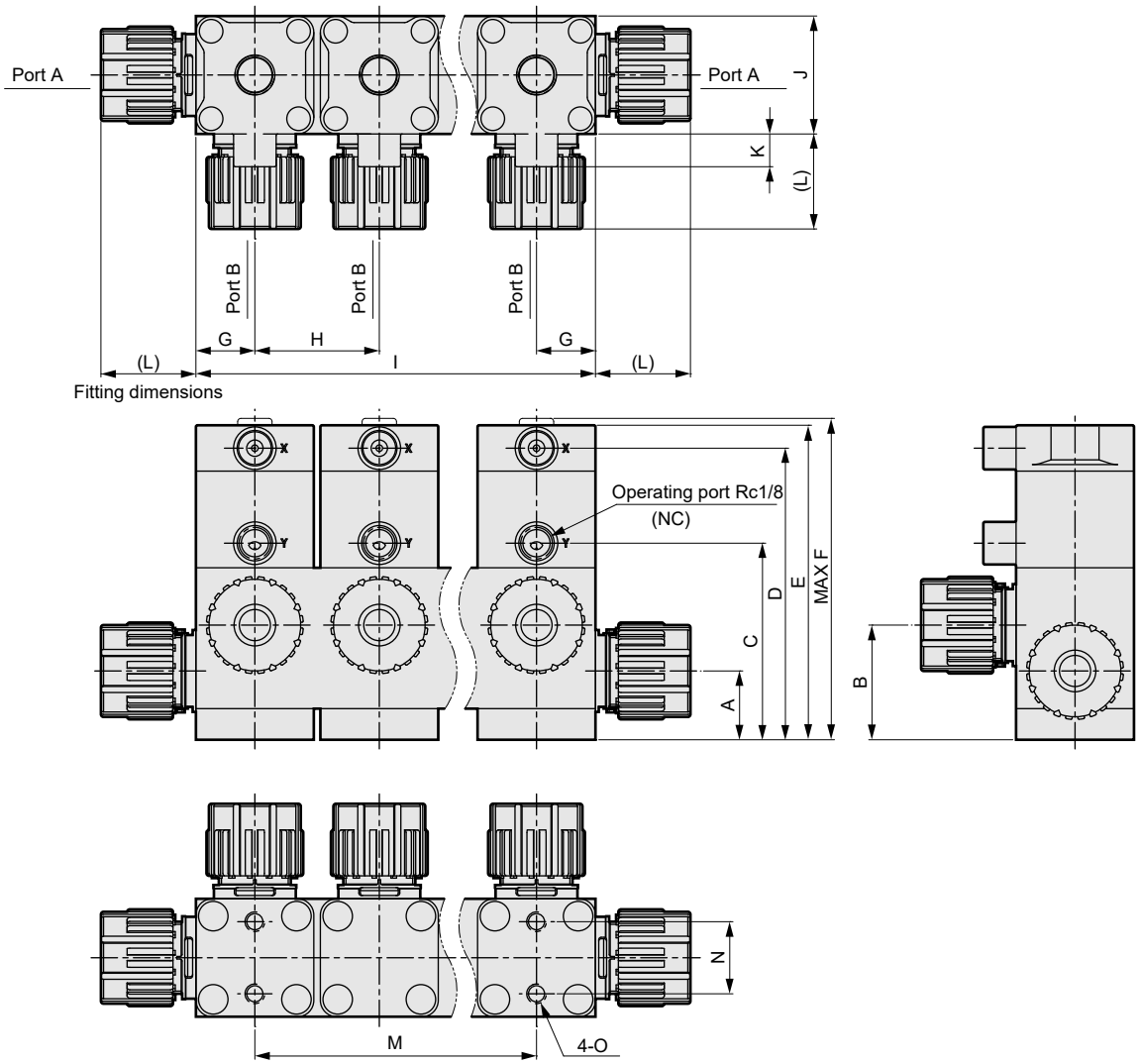

Dimensions

● With flow rate adjustment

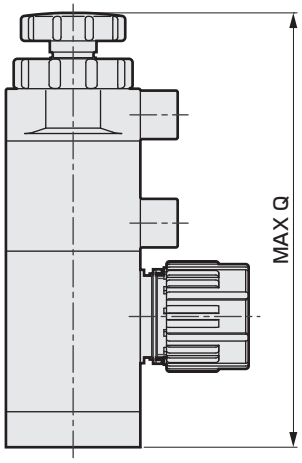

● With sensor

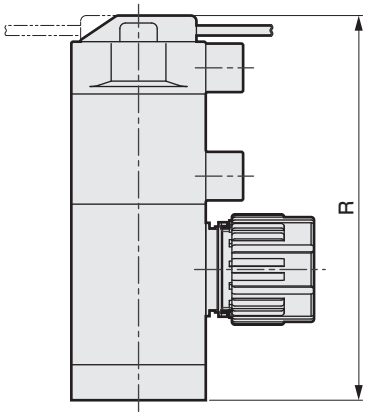

Super 300P Series

Connection (connection size + type)	L
6UP, 8BUP	19
8UP	22
10UP, 10BUP	25
12UP, 15BUP	29
20BUP	36
25UP, 25BUP	43

F-LOCK 60 Series

Connection (connection size + type)	L
6UR	30
8BUR	31
8UR	31
10UR	37
10BUR	39
12UR	37
15BUR	39
20BUR	44
25UR	49.5
25BUR	51

Model	A	B	C	D	E	F	G	H	J	K	Q	R
GAMDZ*3R	17	17	39	54	61	-	11	22.5	22	8	-	-
GAMD0*3R	19	28.5	49	65	72	74	12.5	Table 1	25	8	90	-
GAMD3*3R	21	35	60	89	96	98	18	38	36	10	119	103
GAMD4*3R	27	46	78	118	125	128	23	48	46	8	148	132
GAMD5*3R	35	60	99	142	149	154	30	62	60	8	181	156

Model	Station No.	I	M	N	O
GAMDZ*3R	1	22	-	14±0.3	M6 depth 6
	2	44.5	22.5±0.5		
	3	67	45±0.7		
	4	89.5	67.5±1.0		
	5	112	90±1.0		
GAMD0*3R	Table 1			14±0.3	M6 depth 8
GAMD3*3R	1	36	-	22±0.3	M6 depth 9
	2	74	38±0.3		
	3	112	76±0.4		
	4	150	114±0.5		
	5	188	152±0.7		
GAMD4*3R	1	46	-	28±0.3	M8 depth 10
	2	94	48±0.4		
	3	142	96±0.5		
	4	190	144±0.5		
	5	238	192±0.7		
GAMD5*3R	1	60	-	40±0.3	M8 depth 13
	2	122	62±0.4		
	3	184	124±0.5		
	4	246	186±0.7		

Table 1

Connection (connection size + type)	Station No.	H	I	M
6UP, 8BUP 8UP 6UR, 8BUR 8UR"	1	-	25	-
	2	26	51	26±0.3
	3		77	52±0.4
	4		103	78±0.4
	5		129	104±0.5
10 UP, 10BUP, 10UR, 10BUR	1	-	25	-
	2	31	56	31±0.3
	3		87	62±0.4
	4		118	93±0.5
	5		149	124±0.5

Valve operation and sensor operation

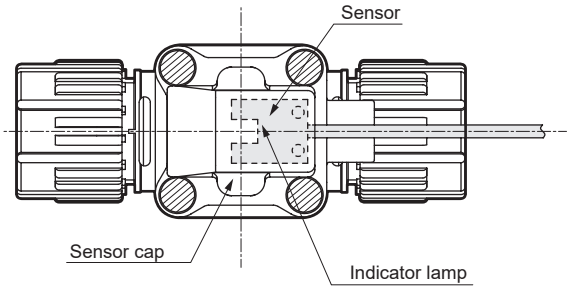

Valve operation			At CLOSE	At OPEN
Sensor	Detector		Light received	Light shielded
	Indicator lamp		ON	OFF
	Output 1	Lead wire color: Black	Output ON	Output OFF
	Output 2	Lead wire color: White	Output OFF	Output ON

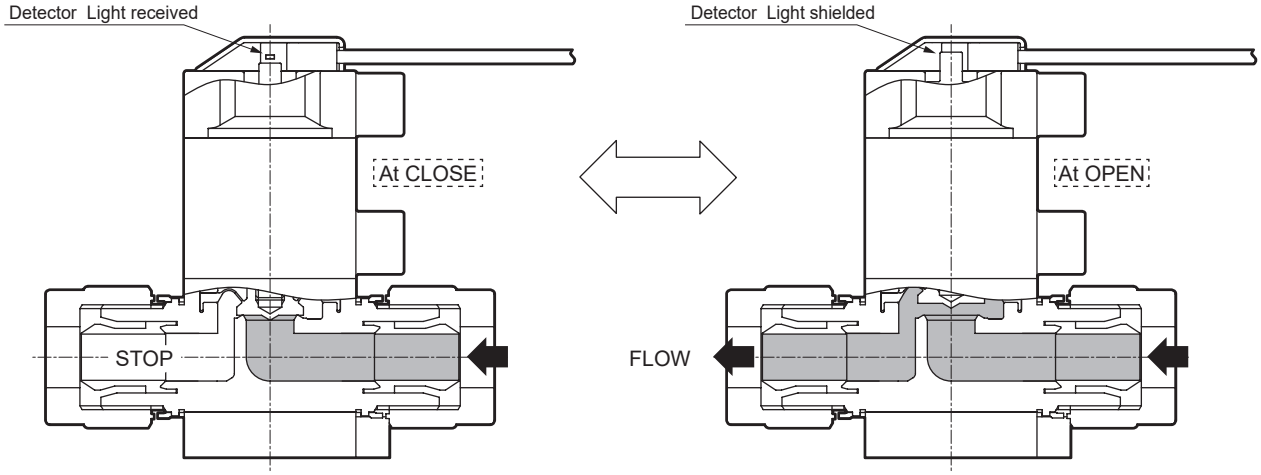

MEMO

Air operated valve for chemical liquids

AMD0$^{1}_{2}_{3}$2 Series

● Connection tube size: ø6, ø6.35, 1/4", (Rc1/8)

Specifications

Item		AMD0$^{1}_{2}_{3}$2-*-4	
Working fluid		Pure water, chemical liquids, air, N_2 gas (*1)	
Fluid temperature	°C	5 to 100 (*2)	
Proof pressure	MPa	1.0	
Working pressure (A→B)	MPa	0 to 0.5	
Working pressure (B→A)	MPa	0 to 0.3	
Valve seat leakage	cm^3/min	0 (water pressure)	
Back pressure	MPa	0 to 0.3	
Ambient temperature	°C	0 to 60	
Frequency		30 cycles/min. or less	
Mounting orientation		Unrestricted	
Connection		Rc1/8, O.D. ø6 tube connection (integrated fitting), OD1/4" tube connection (integrated fitting)	
Orifice size		ø3.5	ø4
Cv value		0.28	0.32
Operating section	Operating pressure MPa	NC/NO 0.35 to 0.5,double acting 0.3 to 0.4 (0.2 to 0.3 for fluid code "P")	
	Operating port	Rc1/8	
Weight	kg	0.09	

*1: Check the compatibility of product structural materials, working fluids and atmosphere.
*2: For use with hydrofluoric acid, or when the fluid temperature exceeds 40°C, consult with CKD.
*3: Refer to pages 46 to 47 for flow characteristics.

Internal structure and parts list

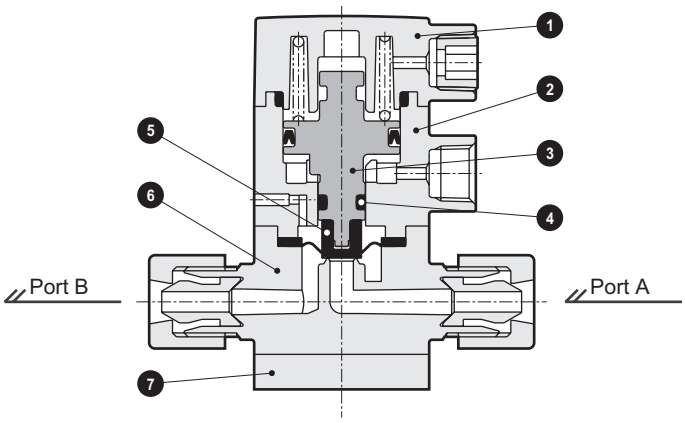

Part No.	Part name	Material (by fluid code)		
		Standard	M	P
1	Cover	PPS		PP
2	Cylinder	PPS		PP
3	Piston rod	PPS		PVDF
4	O-ring	FKM	EPDM	FKM
5	Diaphragm	PTFE		
6	Body	PFA, PTFE		
7	Mounting plate	PPS		PP

The material and structure may vary depending on the model number. Contact CKD for details.

⚠ Always read the precautions on Intro Pages 7 to 14 before use.

How to order

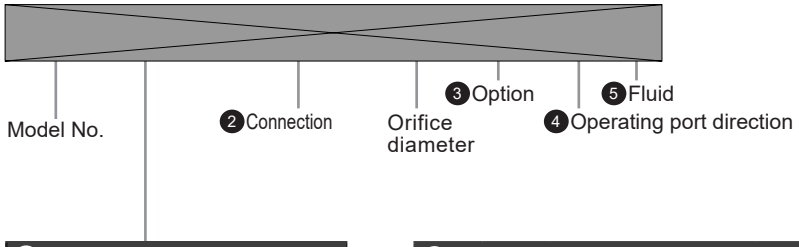

❶ Actuation	
1	NC (normally closed)
2	NO (normally open)
3	Double acting

❷ Connection	6	6US	8BUS	6UP	8BUP	6UF	8BUF	6UR	8BUR	6UK	8BUK	8BUW
	Rc 1/8	Super Type Pillar fitting Integrated		Super 300 Pillar fitting P series integrated		F-LOCK 20 Series Integrated fitting		F-LOCK 60 Series Integrated fitting		Final Lock Fitting Integrated		Flaretek Fitting Integrated
		ø6xø4 tube connection	1/4" x 5/32" tube connection	ø6xø4 tube connection	1/4" x 5/32" tube connection	ø6xø4 tube connection	ø.35x4.3 tube connection	ø6x tube connection	1/4" x 5/32" tube connection	ø6xø4 tube connection	1/4" x 5/32" tube connection	1/4" x 5/32" tube connection
Code / Description \ Orifice size		ø4						ø3.5		ø4		ø3
❸ Option		Body material										
		PFA: PFA molded body, PTFE: PTFE machined body										
0	ON/OFF only	PFA	PFA		PFA		PFA		PFA		PFA	PTFE
1	With flow rate adjustment											
6	ON/OFF / with indicator											
❹ Operating port direction												
4	With valve viewed from above, ⟵ indicates fluid flow direction, ⇦ indicates the operating port direction	●	●	●	●	●	●	●	●	●	●	●
1		●	●	●	●	●	●	●	●	●	●	●
2		●	●	●	●	●	●	●	●	●	●	●
3		●	●	●	●	●	●	●	●	●	●	●
❺ Fluid code												
Blank	Standard	●	●	●	●	●	●	●	●	●	●	●
M	For ammonia	●	●	●	●	●	●	●	●	●	●	●
P	For nitric acid	●	●	●	●	●	●	●	●	●	●	●

* Machined PTFE products will be manufactured on a per-order basis.

●Bottom mounting model No.
(hyphens between and indication of orifice size are not required ❸ ❹)

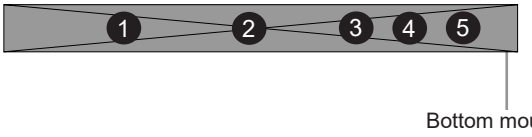

Dimensions

●ON/OFF only

・AMD0$^{1}_{2}{}_{3}$2- [*1] -4-0-*

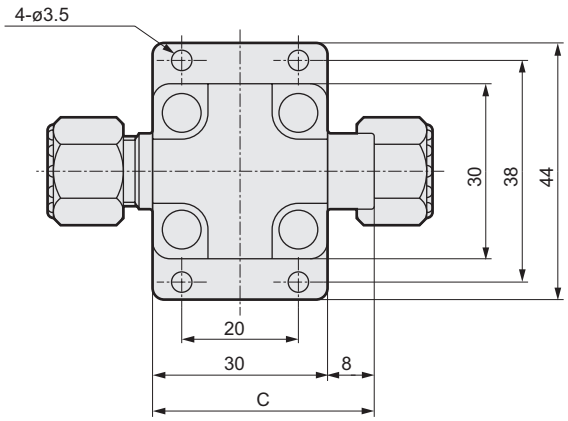

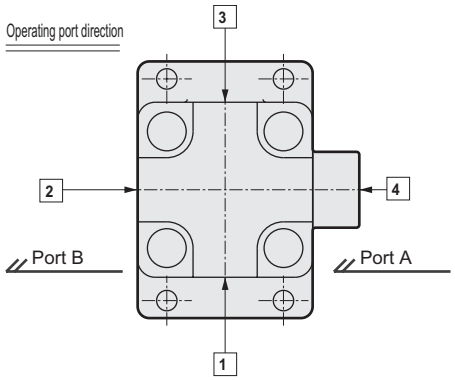

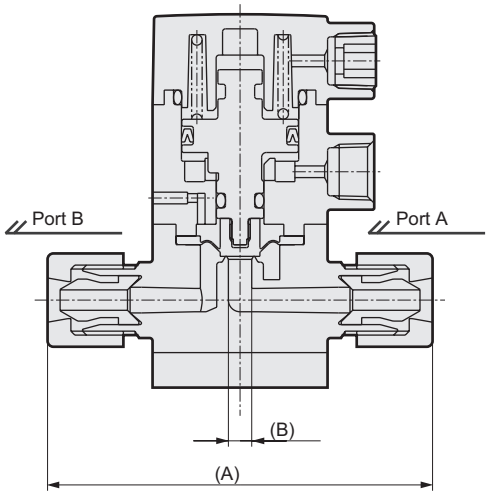

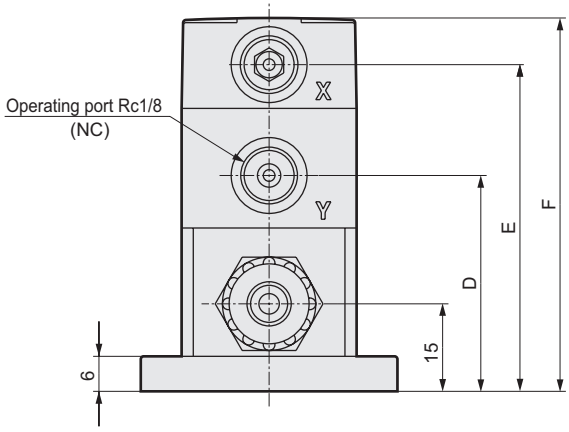

*1 Connector No.	A	B
6	36	4
6US	66	4
8BUS	66	4
6UP	68	4
8BUP	68	4

*1 Connector No.	A	B
6UF	64	4
8BUF	64	4
6UR	90	3.5
8BUR	92	3.5
6UK	71	4
8BUK	71	4
8BUW	86	3

Fluid code	C	D	E	F
Blank/M	38	37	56	64
P	35	36	57	65

Dimensions

●Bottom mounting

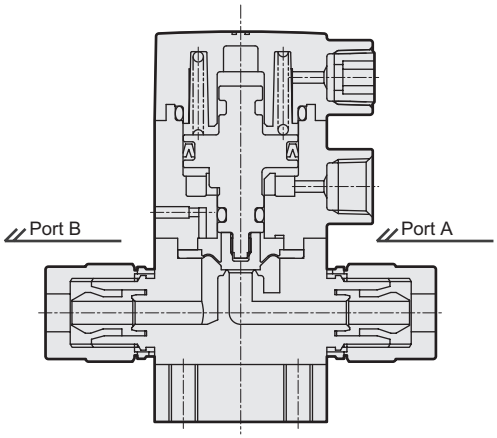

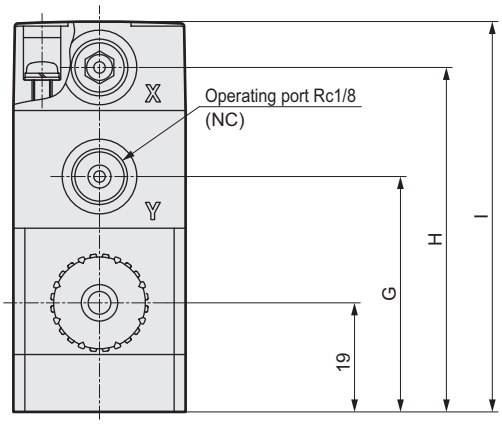

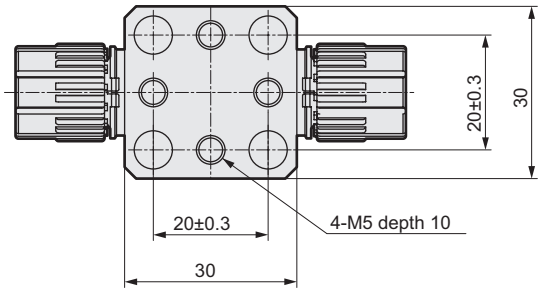

●With flow rate adjustment

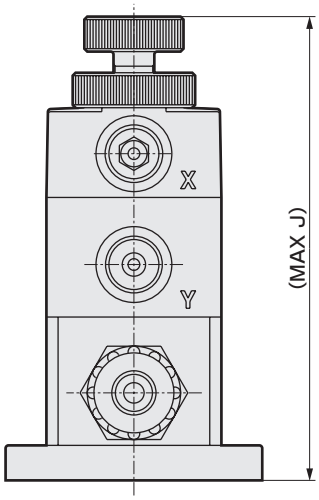

●With indicator

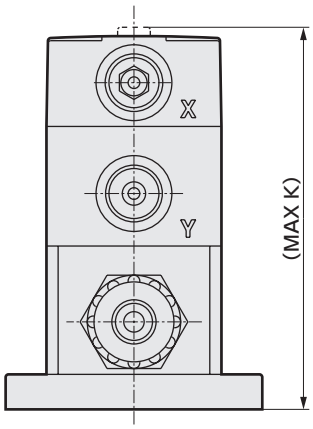

Fluid code	G	H	I	J	K
Blank/M	41	60	68	81	66
P	40	61	69	87	67

When bottom mounting is selected, dimensions J and K will be 4 mm higher.

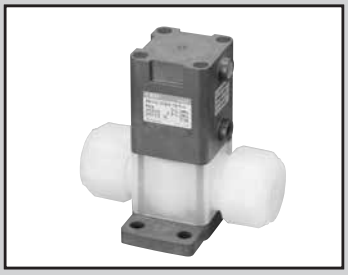

Air operated valve for chemical liquids

AMD3$^{1}_{2}{}_{3}$2/AMD4$^{1}_{2}{}_{3}$2/AMD5$^{1}_{2}{}_{3}$2 Series

● Connection tube size: ø10, ø12, ø25, 3/8", 1/2", 3/4", 1"

RoHS CAD

Export controlled items

*Eligibility: AMD4*2, 5*2

Specifications

Item		AMD3$^{1}_{2}{}_{3}$2-*-8				AMD3$^{1}_{2}{}_{3}$2-*-10		
Working fluid		Chemical liquids, pure water, air, N2 gas (*1)						
Fluid temperature °C		5 to 90 (For high temperature: 5 to 160) (*5)						
Proof pressure MPa		1.0						
Working pressure (A→B)MPa		0 to 0.3 (*3...High pressure specification)						
Working pressure (B→A)MPa		0 to 0.1 (*3...High pressure specification)						
Valve seat leakage cm³/min		0 (water pressure)						
Back pressure MPa		0 to 0.1 (*3...High pressure specification)						
Ambient temperature°C		0 to 60						
Frequency		30 cycles/min. or less						
Mounting orientation		Unrestricted						
Connection		O.D. ø10 tube connection (integrated fitting) O.D. 3/8" tube connection (integrated fitting)				O.D. ø12 tube connection (integrated fitting) O.D. 1/2" tube connection (integrated fitting)		
Orifice size		ø6.3	ø6.4	ø7.5	ø8	ø9.4	ø9.5	ø10
Cv value		0.8		1.25		1.8		
Bypass orifice size (with bypass)		ø2.3						
Operating section	Operating pressure MPa	NC 0.3 to 0.5, NO 0.3 to 0.5 (0.3 to 0.35 for high temperature), double acting 0.3 to 0.4 (0.2 to 0.25 for high temperature)						
	Operating port	Rc1/8 (*2)						
Weight kg		0.21						

Item		AMD4$^{1}_{2}{}_{3}$2-*-16	AMD5$^{1}_{2}{}_{3}$2-*-20
Working fluid		Chemical liquids, pure water, air, N2 gas (*1)	Chemical liquids, pure water, air, N2 gas (*1)
Fluid temperature °C		5 to 90 (For high temperature: 5 to 160) (*5)	5 to 90 (*6)
Proof pressure MPa		1	1
Working pressure (A→B) MPa		0 to 0.3 (*3...High pressure specification)	0 to 0.3 (*3...High pressure specification)
Working pressure (B→A)MPa		0 to 0.1 (*3...High pressure specification)	0 to 0.1 (*3...High pressure specification)
Valve seat leakage cm³/min		0 (water pressure)	0 (water pressure)
Back pressure MPa		0 to 0.1 (*3...High pressure specification)	0 to 0.1 (*3...High pressure specification)
Ambient temperature°C		0 to 60	0 to 60
Frequency		20 cycle/min. or less	20 cycle/min. or less
Mounting orientation		Unrestricted	Unrestricted
Connection		O.D. 3/4" tube connection (integrated fitting)	O.D. ø25 tube connection (integrated fitting)/ O.D. 1" tube connection (integrated fitting) Nominal 16/20 (PVC union integrated fitting)
Orifice size		ø16	ø20
Cv value		5	8
Bypass orifice size (with bypass)		ø6	ø6
Operating section	Operating pressure MPa	NC: 0.3 to 0.5, NO: 0.3 to 0.5 (0.3 to 0.35 for high temperature), Double acting: 0.3 to 0.4 (0.2 to 0.25 for high temperature)	NC/NO: 0.3 to 0.5,double acting: 0.3 to 0.4
	Operating port	Rc1/8 (*2)	Rc1/8 (*7)
Weight kg		0.42	0.84

*1: Check the compatibility of product structural materials, working fluids and atmosphere.
*2: Use a resin fitting for connection to the operating port. (When using a metal fitting, select one with a reinforcing ring. However, a reinforcing ring cannot be selected for those with fluid code P for nitric acid and hydrofluoric acid.)
*3: Refer to page 64 for high-pressure specifications.
*4: Refer to pages 46 to 47 for flow characteristics.
*5: For use with hydrofluoric acid, or when the fluid temperature exceeds 40°C, consult with CKD.
*6: 5 to 50°C when the integrated PVC union fitting is used for connection. For use with hydrofluoric acid, or when the fluid temperature exceeds 40°C, consult with CKD.
*7: Use a resin fitting for connection to the operating port. (When using a metal fitting, select one with reinforcing ring. However, a reinforcing ring cannot be selected for those with fluid code P for nitric acid and hydrofluoric acid.) However, since the integrated PVC union fitting comes with reinforcing ring, a metal fitting can also be used.

⚠ Always read the precautions on Intro Pages 7 to 14 before use.

Internal structure and parts list

●AMD3*2 Series

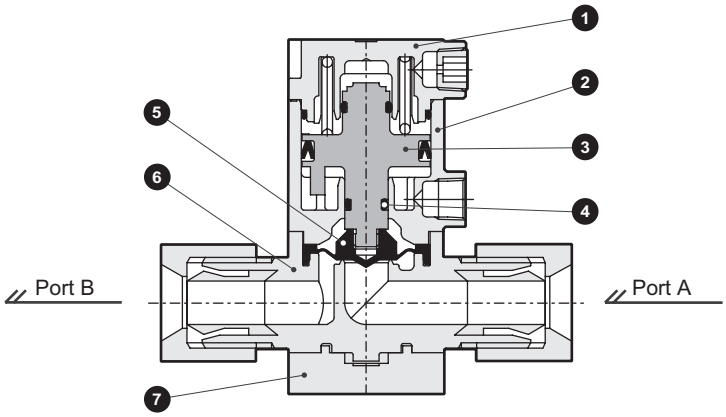

Part No.	Part name	Material (by fluid code)		
		Standard	M	P
1	Cover	PPS		PP
2	Cylinder	PPS		PP
3	Piston rod	PPS		PVDF
4	O-ring	FKM	EPDM	FKM
5	Diaphragm	PTFE		
6	Body	PFA, PTFE		
7	Mounting plate	PPS		PP

The material and structure may vary depending on the model number.
Contact CKD for details.

●AMD4*2 Series

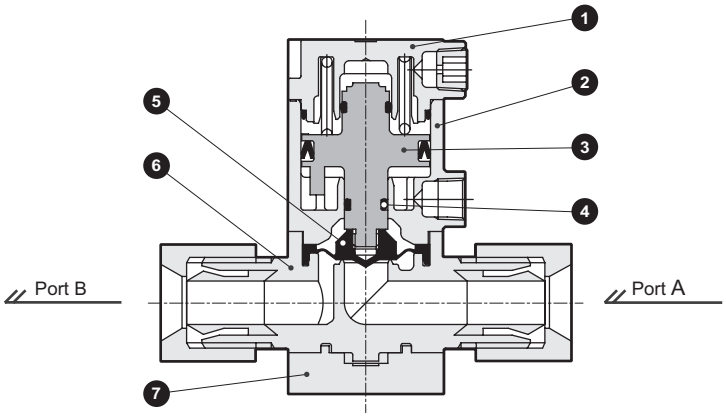

Part No.	Part name	Material (by fluid code)		
		Standard/Y/E	M	P
1	Cover	PPS		PP
2	Cylinder	PPS		PP
3	Piston rod	PPS		PVDF
4	O-ring	FKM	EPDM	FKM
5	Diaphragm	PTFE		
6	Body	PFA, PTFE		
7	Mounting plate	PPS		PP

The material and structure may vary depending on the model number.
Contact CKD for details.

●AMD5*2 Series

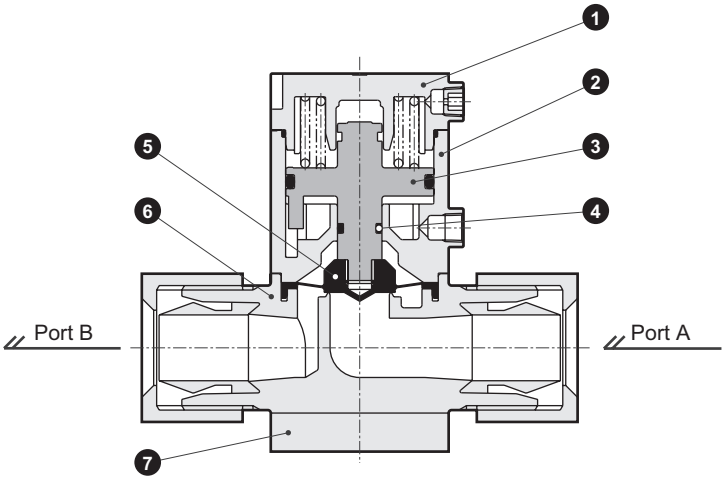

Part No.	Part name	Material (by fluid code)		
		Standard	M	P
1	Cover	PPS		PP
2	Cylinder	PPS		PP
3	Piston rod	PPS		PVDF
4	O-ring	FKM	EPDM	FKM
5	Diaphragm	PTFE		
6	Body	PFA, PTFE		
7	Mounting plate	PPS		PP

The material and structure may vary depending on the model number.
Contact CKD for details.

How to order

●AMD3*2 Series (connection: ø10, 3/8" tube connection)

AMD3 (1) 2 - (10UA) - 8 - (1) - (4) (Y)

- Model No.
- ❶ Actuation
- ❷ Connection
- Orifice diameter indication
- ❸ Option
- ❹ Operating port direction
- ❺ Fluid

❶ Actuation

1	NC (normally closed)
2	NO (normally open)
3	Double acting

❷ Connection

	10US	10BUS	10UP	10BUP	10UA	10BUA	10UR	10BUR	10UK	10BUK	10BUW
	Super Type Pillar fitting Integrated		Super 300 Pillar fitting P series integrated		F-LOCK 20A Series Integrated fitting		F-LOCK 60 Series Integrated fitting		Final Lock Fitting Integrated		Flaretek Fitting Integrated
	ø10xø8 tube connection	3/8"×1/4" tube connection	ø10xø8 tube connection	3/8"×1/4" tube connection	ø10xø8 tube connection	3/8"×1/4" tube connection	ø10xø8 tube connection	3/8"×1/4" tube connection	ø10xø8 tube connection	3/8"×1/4" tube connection	3/8"× tube connection
Code / Description \ Orifice size	ø8						ø7.5	ø6.4	ø7.5		ø6.3

❸ Option / Body material

Code	Description	10US	10BUS	10UP	10BUP	10UA	10BUA	10UR	10BUR	10UK	10BUK	10BUW
		PFA: PFA molded body, PTFE: PTFE machined body										
0	ON/OFF only	PFA		PFA		PFA		PFA		PFA		PTFE
1	With flow rate adjustment											
2	With bypass	PTFE		PTFE		PTFE		PTFE		PTFE		
3	With flow rate adjustment/bypass											
6	ON/OFF with indicator	PFA		PFA		PFA		PFA		PFA		
7	With bypass with indicator	PTFE		PTFE		PTFE		PTFE		PTFE		

❹ Operating port direction

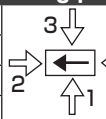

With valve viewed from above, ← indicates fluid flow direction ⇦ and operating port direction.

	10US	10BUS	10UP	10BUP	10UA	10BUA	10UR	10BUR	10UK	10BUK	10BUW
4	●	●	●	●	●	●	●	●	●(*1)	●(*1)	●
1	●	●	●	●	●	●	●	●	●	●	●
2	●	●	●	●	●	●	●	●	●(*1)	●(*1)	●
3	●	●	●	●	●	●	●	●	●	●	●

❺ Fluid code

Code	Description	10US	10BUS	10UP	10BUP	10UA	10BUA	10UR	10BUR	10UK	10BUK	10BUW
Blank	Standard	●	●	●	●	●	●	●	●	●	●	●
M	For ammonia	●	●	●	●	●	●	●	●	●	●	●
P	For nitric acid, for hydrofluoric acid (*3)	●	●	●	●	●	●	●	●	●	●	●
Y	For high temperature (5 to 160°C) (*2)	●	●	●	●	●	●			●	●	
E	For high temperature (5 to 160°C), PTFE cut body (*2)	●	●	●	●	●	●			●	●	

* Machined PTFE products will be manufactured on a per-order basis.

●Model No. of operating port with reinforcing ring
(hyphen between ❸ ❹ is not required)

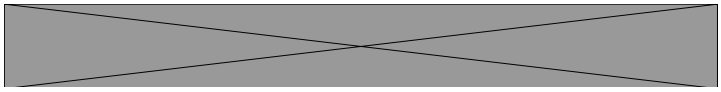

●Bottom mounting model No.
(hyphen between ❸ ❹ and indication of orifice size are not required)

AMD3 (❶) 2 - (❷) - (❸)(❹)(❺) X

X: Bottom mounting

●Operating port with reinforcing ring + bottom mounting model No.
(hyphen between ❸ ❹ and indication of orifice size are not required)

AMD3 (❶) 2 - (❷) - (❸)(❹)(❺) R X

R: With reinforcing ring
X: Bottom mounting

⚠ Precautions for model No. selection

*1: Since the Final Lock Ftting Nut and operating air piping may interfere, be sure to check the dimensions before making the selection.

*2: Item ❸ is not available if the option is 2 (with bypass), 3 (with flow rate adjustment/bypass) or 7 (with bypass/with indicator). It cannot be used for nitric acid or hydrofluoric acid.

*3: If P is selected in ❺, R with reinforcing ring cannot be selected. If in item ❸ the option is 2 (with bypass), 3 (with flow rate adjustment/bypass) or 7 (with bypass/with indicator), it is not available.

How to order

●AMD3*2 Series (connection: ø12,1/2" tube connection)

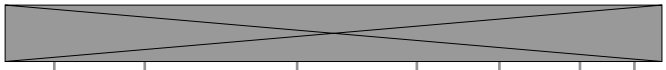

Model No. ❷Connection Orifice diameter ❸Option ❹Operating port direction ❺Fluid

❶ Actuation	
1	NC (normally closed)
2	NO (normally open)
3	Double acting

❷ Connection	12US	15BUS	12UP	15BUP	12UA	15BUA	12UR	15BUR	12UK	15BUK	15BUW
	Super Type Pillar fitting Integrated		Super 300 Pillar fitting P series integrated		F-LOCK 20A Series Integrated fitting		F-LOCK 60 Series Integrated fitting		Final Lock Fitting Integrated		Flaretek Fitting Integrated
	ø12xø10 tube connection	1/2" ×3/8" tube connection	ø12xø10 tube connection	1/2" ×3/8" tube connection	ø12xø10 tube connection	1/2" ×3/8" tube connection	ø12xø10 tube connection	1/2" ×3/8" tube connection	ø12xø10 tube connection	1/2" ×3/8" tube connection	1/2" ×3/8" tube connection
Code / Orifice size	ø10						ø9.5		ø10		ø9.4

❸ Option (*1)		Body material										
		PFA: PFA molded body, PTFE: PTFE machined body										
0	ON/OFF only	PFA		PFA		PFA		PFA		PFA		PFA
1	With flow rate adjustment											
2	With bypass	PTFE		PFA		PTFE		PTFE		PTFE		PTFE
3	With flow rate adjustment/bypass											
6	ON/OFF / with indicator	PFA		PFA		PFA		PFA		PFA		PFA
7	With bypass with indicator	PTFE		PFA		PTFE		PTFE		PTFE		PTFE

❹ Operating port direction												
4	With valve viewed from above, ⟵ indicates fluid flow direction ⇦ and operating port direction.	●	●	●	●	●	●	●	●	●	●(*1)	●
1		●	●	●	●	●	●	●	●	●	●	●
2		●	●	●	●	●	●	●	●	●	●(*1)	●
3		●	●	●	●	●	●	●	●	●	●	●

❺ Fluid												
Blank	Standard	●	●	●	●	●	●	●	●	●	●	●
M	For ammonia	●	●	●	●	●	●	●	●	●	●	●
P	For nitric acid, for hydrofluoric acid (*3)	●	●	●	●	●	●	●	●	●	●	●
Y	For high temperature (5 to 160°C) (*2)	●	●	●	●	●	●			●	●	
E	For high temperature (5 to 160°C), PTFE cut body (*2)	●	●	●	●	●	●			●	●	

* Machined PTFE products will be manufactured on a per-order basis.

●Model No. of operating port with reinforcing ring
(hyphen between ❸ ❹ is not required)

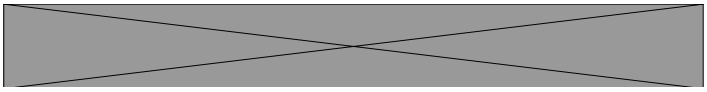

●Bottom mounting model No.
(hyphen between ❸ ❹ and indication of orifice size are not required)

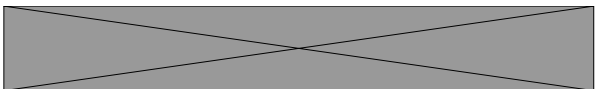

●Operating port with reinforcing ring + bottom mounting model No.
(hyphen between ❸ ❹ and indication of orifice size are not required)

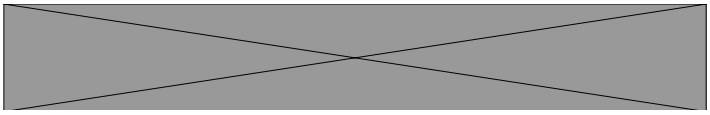

Precautions for model No. selection

*1: Since the Final Lock Fitting Nut and operating air piping may interfere, be sure to check the dimensions before making the selection.

*2: Item ❸ is not available if the option is 2 (with bypass), 3 (with flow rate adjustment/bypass) or 7 (with bypass/with indicator). It cannot be used for nitric acid or hydrofluoric acid.

*3: If P is selected in ❺, R with reinforcing ring cannot be selected. Item ❸ is not available if the option is 2 (with bypass), 3 (with flow rate adjustment/bypass) or 7 (with bypass/with indicator).

How to order

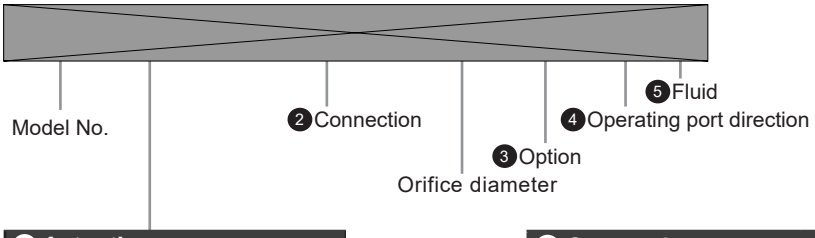

❶ Actuation	
1	NC (normally closed)
2	NO (normally open)
3	Double acting

❷ Connection	20BUS	20BUP	20BUA	20BUR	20BUK	20BUW
	Super-type pillar integrated fitting	Super 300 type Pillar fitting P Series integrated	F-LOCK 20A Series Integrated fitting	F-LOCK 60 Series Integrated fitting	Final Lock Integrated fitting	Flaretek Integrated fitting
	3/4" ×5/8" tube connectin					
Code / Description \ Orifice size	ø16			ø15.9	ø16	ø14.7
❸ Option	Body material					
	PFA: PFA molded body, PTFE: PTFE machined body					
0 ON/OFF only	PFA	PFA	PTFE	PFA	PTFE	PFA
1 With flow rate adjustment						
2 With bypass	PFA	PFA	PTFE	PTFE	PTFE	PTFE
3 With flow rate adjustment/bypass						
6 ON/OFF with indicator	PFA	PFA	PTFE	PFA	PTFE	PFA
7 With bypass with indicator	PFA	PFA	PTFE	PTFE	PTFE	PTFE
❹ Operating port direction						
4	●	●	●	●	●	●
1	●	●	●	●	●	●
2	●	●	●	●	●	●
3	●	●	●	●	●	●
❺ Fluid						
Blank Standard	●	●	●	●	●	●
M For ammonia	●	●	●	●	●	●
P For nitric acid, for hydrofluoric acid (*2)	●	●	●	●	●	●
Y For high temperature (5 to 160°C) (*1)	●	●				
E For high temperature (5 to 160°C), PTFE cut body (*1)	●	●	●		●	

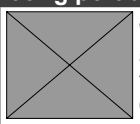
With valve viewed from above, ← indicates fluid flow direction ⇦ and operating port direction.

* Machined PTFE products will be manufactured on a per-order basis.

●Model No. of operating port with reinforcing ring (hyphen between ❸ ❹ is not required)

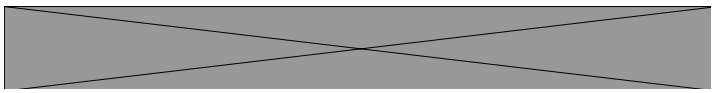

●Bottom mounting model No. (hyphens between and indication of orifice size are not required ❸ ❹)

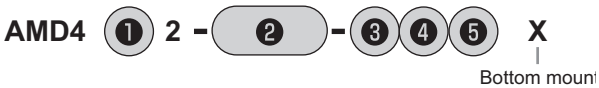

●Operating port with reinforcing ring + bottom mounting model No. (hyphens between and indication of orifice size are not required ❸ ❹)

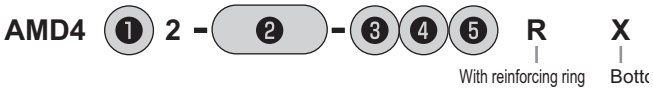

Precautions for model No. selection

*1: Item ❸ is not available if the option is 2 (with bypass), 3 (with flow rate adjustment/bypass) or 7 (with bypass/with indicator). It cannot be used for nitric acid or hydrofluoric acid.

*2: If P is selected in ❺, R with reinforcing ring cannot be selected. If in item ❸ the option is 2 (with bypass), 3 (with flow rate adjustment/bypass) or 7 (with bypass/with indicator), it is not available.

How to order

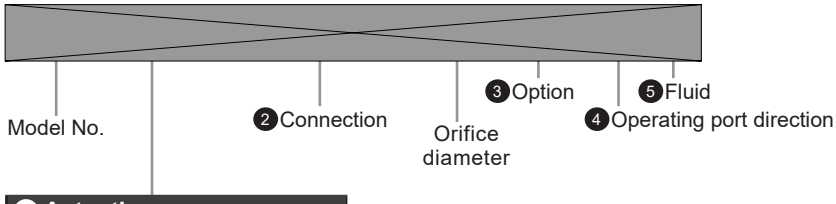

❶ Actuation	
1	NC (normally closed)
2	NO (normally open)
3	Double acting

❷ Connection	25US	25BUS	25UP	25BUP	25BUA	25UR	25BUR	25UK	25BUK	25BUW	15AU	20AU
	Super Type Pillar fitting Integrated		Super 300 Pillar fitting P series integrated		F-LOCK 20A Series Fitting Integrated	F-LOCK 60 Series Integrated fitting		Final Lock Fitting Integrated		Flaretek Fitting Integrated	PVC union Fitting Integrated	
	ø25×22 tube connection	1" x 7/8" tube connection	ø25×22 tube connection	1" x 7/8" tube connection	1"×7/8" tube connection (*1)	ø25×tube connection	1" x 7/8" tube connection	ø25×tube connection	1" x 7/8" tube connection	1" x 7/8" tube connection	Nominal 16	Nominal 20
Code / Description / Orifice size	ø20											
❸ Option / Body material	PFA: PFA molded body, PTFE: PTFE machined body											
0 ON/OFF only	PFA		PFA		PTFE	PTFE		PTFE		PTFE	PFA	
1 With flow rate adjustment												
2 With bypass	PTFE		PFA		PTFE	PTFE		PTFE		PTFE	(*3)	
3 With flow rate adjustment/bypass												
6 ON/OFF / with indicator	PFA		PFA		PTFE	PTFE		PTFE		PTFE	PFA	
7 With bypass with indicator	PTFE		PFA		PTFE	PTFE		PTFE		PTFE	(*3)	
❹ Operating port direction												
4	●	●	●	●	●	●	●	●	●	●	●	●
1	●	●	●	●	●	●	●	●	●	●	●	●
2	●	●	●	●	●	●	●	●	●	●	●	●
3	●	●	●	●	●	●	●	●	●	●	●	●
❺ Fluid												
Blank Standard	●	●	●	●	●	●	●	●	●	●	●	●
M For ammonia	●	●	●	●	●	●	●	●	●	●	●	●
P For nitric acid, for hydrofluoric acid (*2)	●	●	●	●	●	●	●	●	●	●		

With valve viewed from above, ← indicates fluid flow direction ⇦ and operating port direction.

* Machined PTFE products will be manufactured on a per-order basis.

●Model No. of operating port with reinforcing ring
(hyphen between ❸ ❹ is not required)

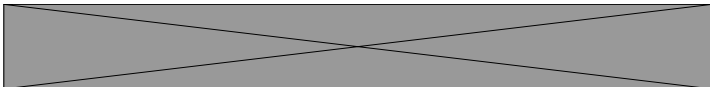

●Bottom mounting model No.
(hyphen between ❸ ❹ and indication of orifice size are not required)

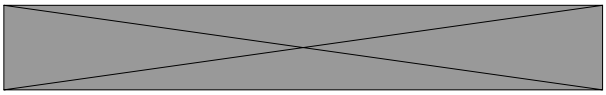

●Operating port with reinforcing ring + bottom mounting model No.
(hyphen between ❸ ❹ and indication of orifice size are not required)

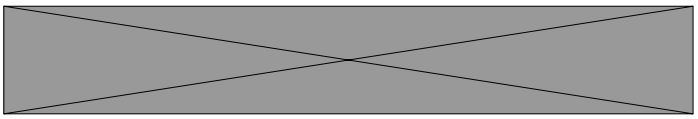

Precautions for model No. selection

*1: It can also be used for ø25 x ø22 tube connection.
*2: If 15AU or 20AU is selected in ❷ or P is selected in ❺, R with reinforcing ring cannot be selected. It is not available if the option in ❸ is 2 (with bypass), 3 (with flow rate adjustment/bypass) or 7 (with bypass/with indicator).
*3: Select from the AMD41L Series (page 88).

Dimensions

●ON/OFF only

・AMD3$^{1}_{2}$$_{3}$2- [*1] -8

・AMD3$^{1}_{2}$$_{3}$2- [*1] -10

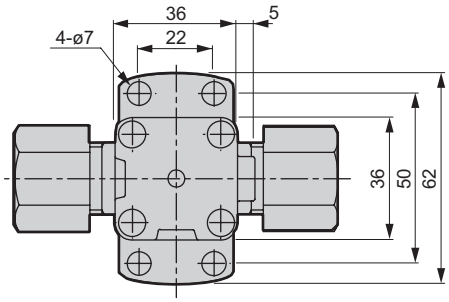

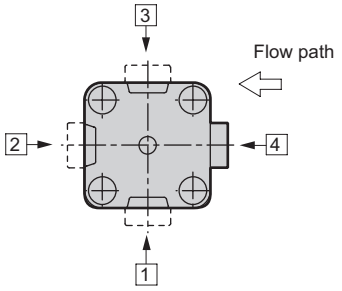

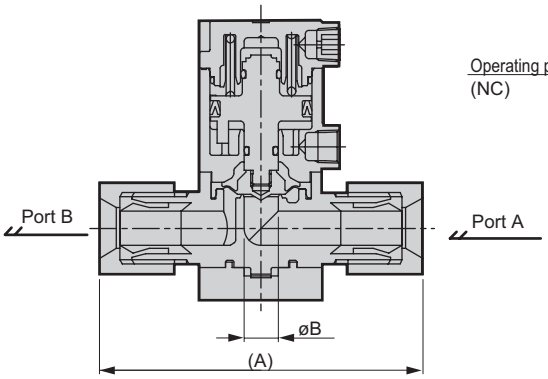

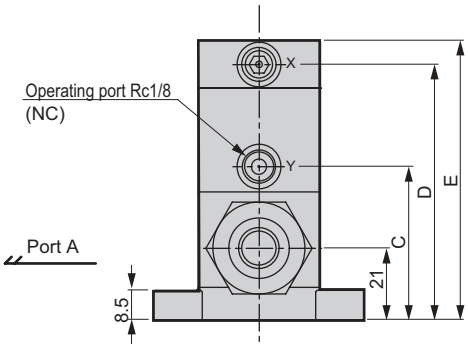

*1 (Connector No.)	A	B
10US	86	8
10BUS	86	8
10UP	86	8
10BUP	86	8
10UA	78	8
10BUA	78	8
10UR	110	7.5
10BUR	114	6.4
10UK	96	7.5
10BUK	96	7.5
10BUW	97	6.3

*1 (Connector No.)	A	B
12US	95	10
15BUS	95	10
12UP	94	10
15BUP	94	10
12UA	86	10
15BUA	86	10
12UR	110	9.5
15BUR	114	9.5
12UK	102	10
15BUK	102	10
15BUW	103	9.4

Fluid code	C	D	E
Blank/M/P/Y	45	75	82
E	49	79	86

●Bottom mounting

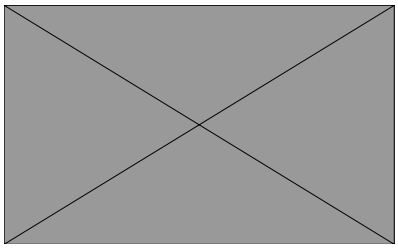

Dimensions

●With flow rate adjustment

・AMD3$^{1}_{2}{}_{3}$2-*-*-1

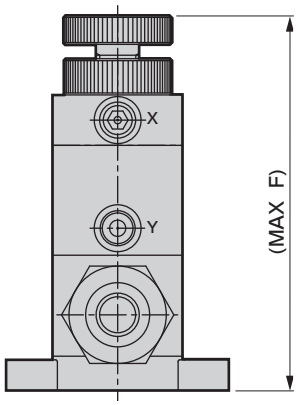

●With flow rate adjustment bypass

・AMD3$^{1}_{2}{}_{3}$2-*-*-3

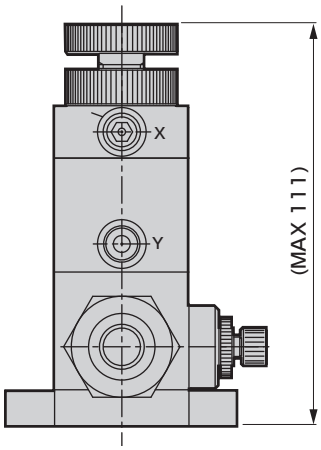

(For other dimensions, refer to the dimensions with bypass.)

●With bypass

・AMD3$^{1}_{2}{}_{3}$2-*-*-2/7

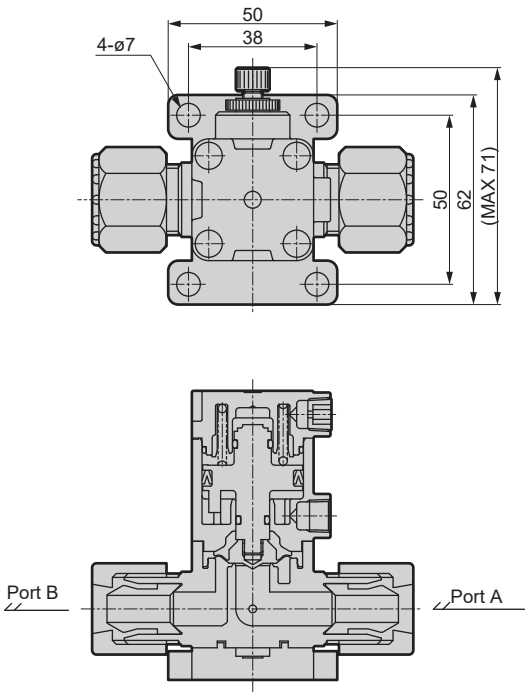

●With indicator

・AMD3$^{1}_{2}{}_{3}$2-*-*-6/7

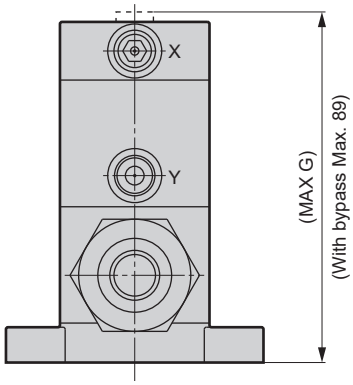

Fluid code	F	G
Blank/M/P/Y	107	85
E	110	88

Dimensions

●ON/OFF only

・AMD4$^{1}_{2}_{3}$2- [*1] -16

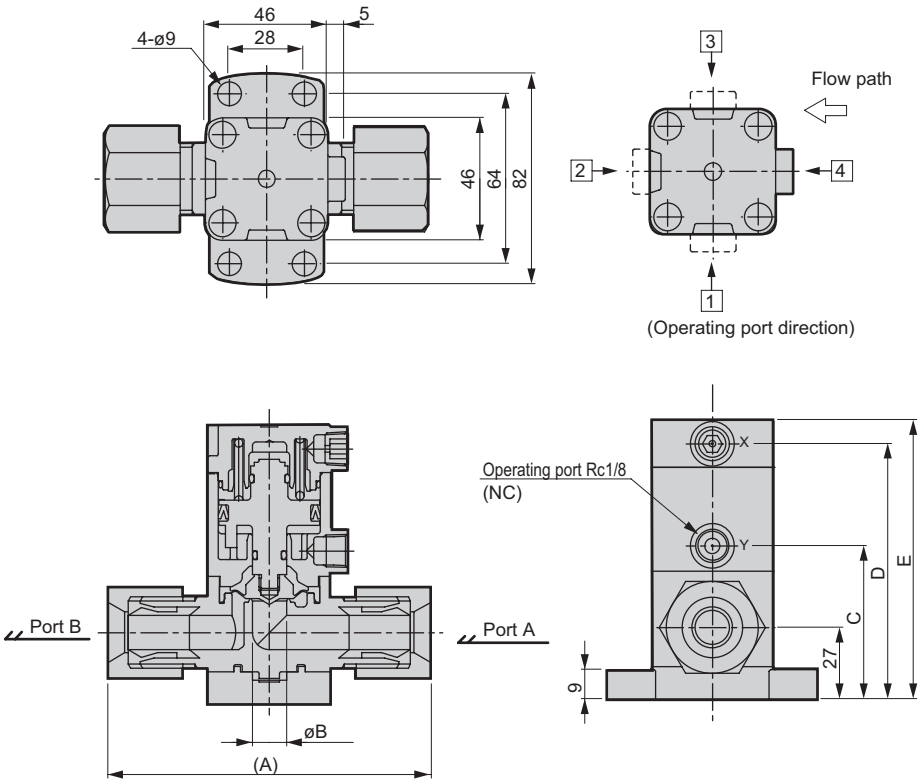

*1 (Connector No.)	A	B
20BUS	124	16
20BUP	118	16
20BUA	108	16
20BUR	134	15.9
20BUK	119	16
20BUW	122	14.7

Fluid code	C	D	E
Blank/M/Y	60	97	106
P	60	97	107
E	64	101	110

●Bottom mounting

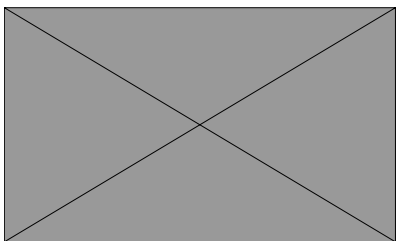

Dimensions

●With flow rate adjustment

・AMD4$^{1}_{2}_{3}$2-*-16-1

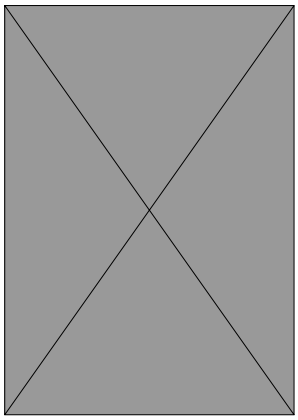

●With flow rate adjustment bypass

・AMD4$^{1}_{2}_{3}$2-*-16-3

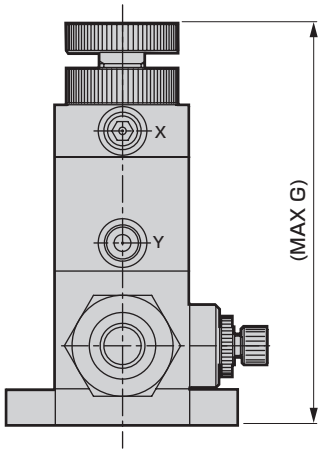

(For other dimensions, refer to the dimensions with bypass.)

●With bypass

・AMD4$^{1}_{2}_{3}$2-*-16-2/7

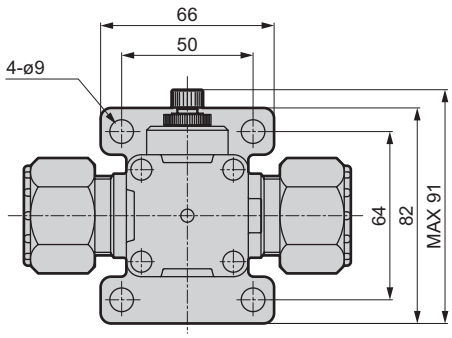

●With indicator

・AMD4$^{1}_{2}_{3}$2-*-16-6/7

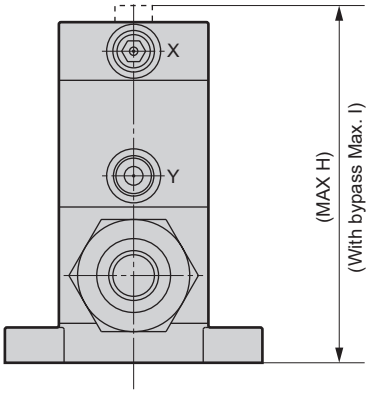

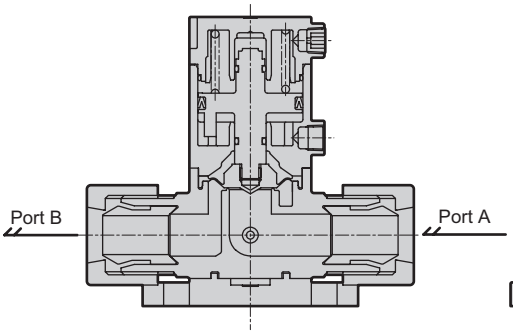

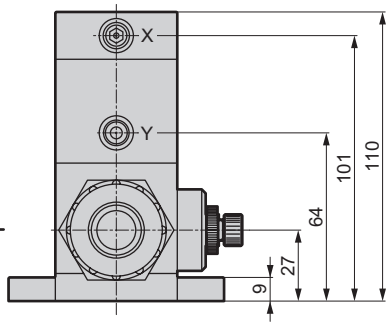

Fluid code	F	G	H	I
Blank/M	130	134	110	114
P	133	137	111	115
Y	130		110	
E	134		114	

Dimensions

●ON/OFF only

・AMD5$^{1}_{2}$$_{3}$2- [*1] -20

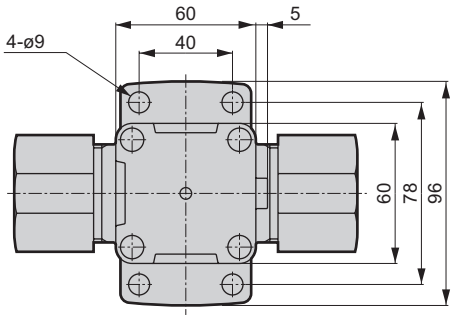

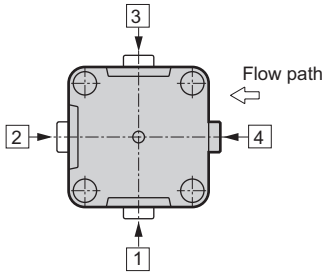

(Operating port direction)

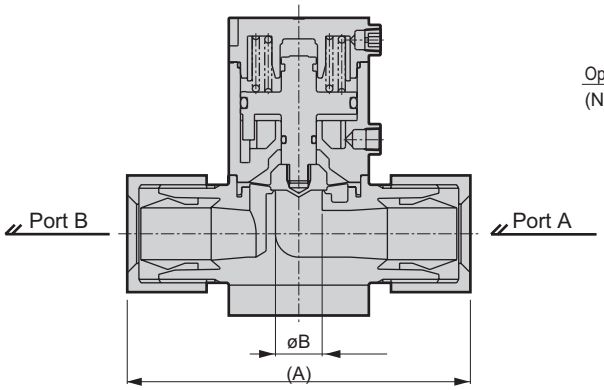

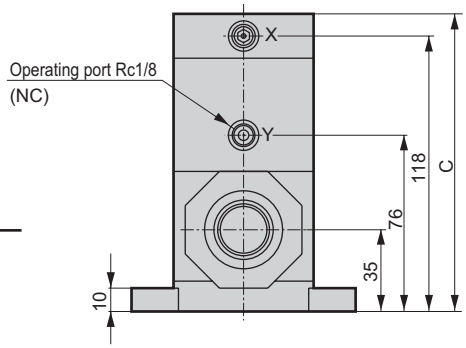

*1 (Connector No.)	A	B
25US	147	20
25BUS	147	20
25UP	146	20
25BUP	146	20
25BUA	140	20
25UR	159	20
25BUR	162	20
25UK	141	20
25BUK	141	20
25BUW	156	20

Fluid code	C
Blank/M	128
P	132

●PVC union fitting integrated

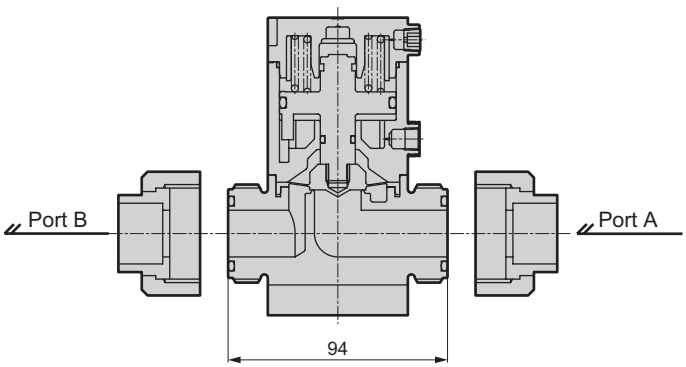

●Bottom mounting

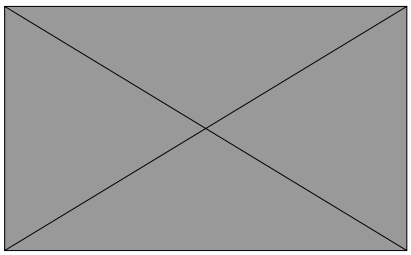

Dimensions

●With flow rate adjustment

・AMD5$^{1}_{2}$$_{3}$ 2-*-20-1

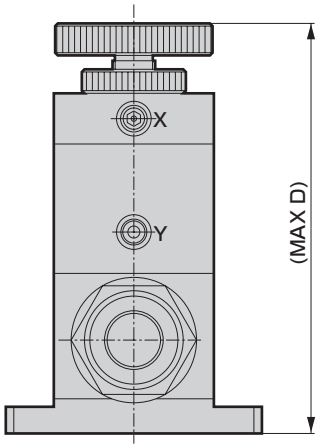

●With indicator

・AMD5$^{1}_{2}$$_{3}$ 2-*-20-6/7

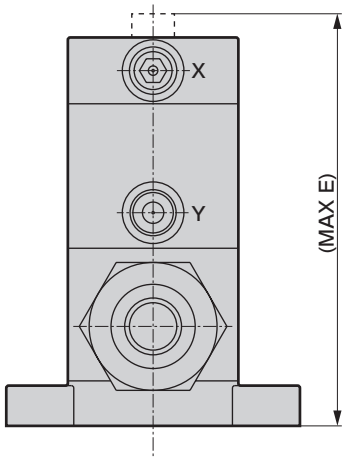

Fluid code	D	E
Blank/M	159	133
P	166	137

The dimensions are the same with bypass.

●With bypass

・AMD5$^{1}_{2}$$_{3}$ 2-*-20-2/7

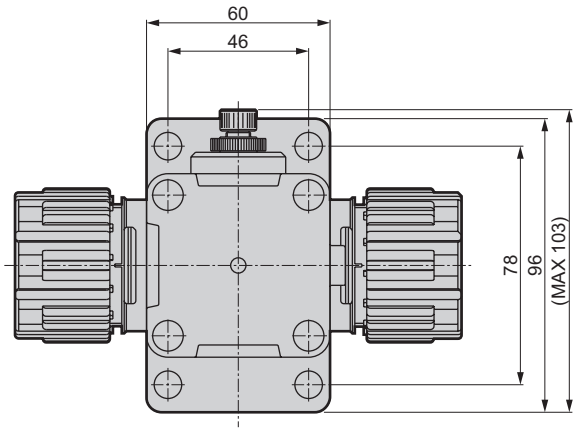

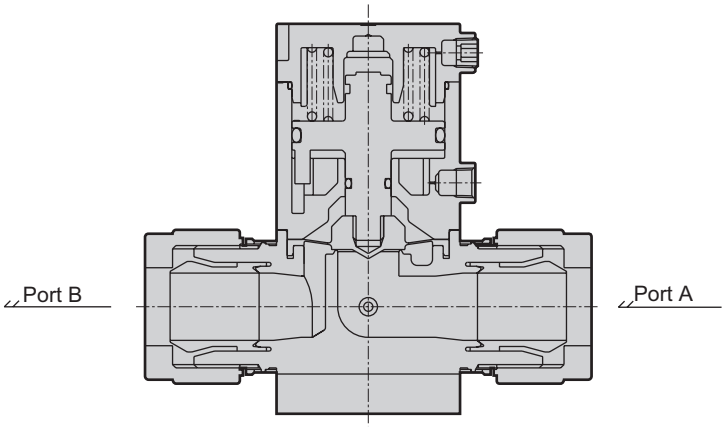

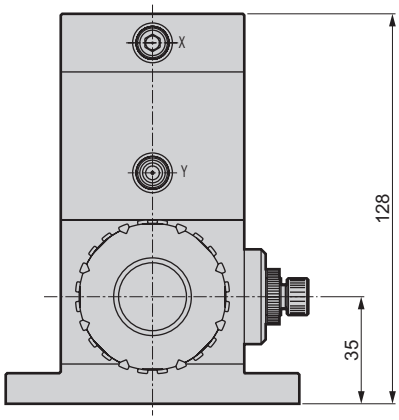

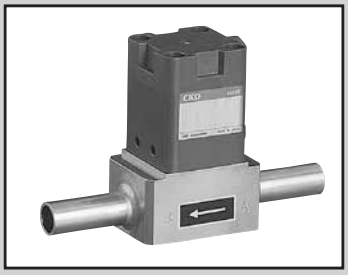

Stainless steel body air operated valve for chemical liquids

AMD3$^{1}_{2}{}_{3}$2/AMD4$^{1}_{2}{}_{3}$2/AMD5$^{1}_{2}{}_{3}$2 Series

RoHS CAD

Specifications

Item		AMD3$^{1}_{2}{}_{3}$2-8/3BT/6S	AMD3$^{1}_{2}{}_{3}$2-10/4BT/8S
Working fluid		Chemical liquids, pure water, air, N2 gas (*1)	
Fluid temperature °C		5 to 120	
Proof pressure MPa		1.0	
Working pressure (A→B) MPa		0 to 0.3 (*2...High pressure specification)	
Working pressure (B→A) MPa		0 to 0.1 (*2:High pressure specification)	
Valve seat leakage cm^3/min		0 (water pressure)	
Back pressure MPa		0 to 0.1 (*2:High pressure specification)	
Ambient temperature °C		0 to 60	
Frequency		30 cycles/min. or less	
Mounting orientation		Unrestricted	
Connection		Rc1/4 3/8" SUS tube Double barbed fitting for 3/8" (*3)	Rc3/8 1/2" SUS tube Double barbed fitting for 1/2" (*3)
Orifice size		ø8	ø10
Operating section	Operating pressure MPa	NC/NO 0.3 to 0.5,double acting 0.3 to 0.4	
	Operating port	Rc1/8	
Weight kg		0.45	

Item		AMD4$^{1}_{2}{}_{3}$2-15/6BT/12S	AMD5$^{1}_{2}{}_{3}$2-8BT/16S
Working fluid		Chemical liquids, pure water, air, N2 gas (*1)	Chemical liquids, pure water, air, N2 gas (*1)
Fluid temperature °C		5 to 120	5 to 120
Proof pressure MPa		1.0	1.0
Working pressure (A→B) MPa		0 to 0.3 (*2...High pressure specification)	0 to 0.3 (*2...High pressure specification)
Working pressure (B→A) MPa		0 to 0.1 (*2:High pressure specification)	0 to 0.1 (*2:High pressure specification)
Valve seat leakage cm^3/min		0 (water pressure)	0 (water pressure)
Back pressure MPa		0 to 0.1 (*2:High pressure specification)	0 to 0.1 (*2:High pressure specification)
Ambient temperature °C		0 to 60	0 to 60
Frequency		20 cycle/min. or less	20 cycle/min. or less
Mounting orientation		Unrestricted	Unrestricted
Connection		Rc 1/2, 3/4" SUS tube / Double barbed fitting for 3/4" (*3)	1" SUS tubing Double barbed fitting for 1" (*3)
Orifice size		ø16	ø20
Operating section	Operating pressure MPa	NC/NO 0.3 to 0.5, double acting 0.3 to 0.4	NC/NO 0.3 to 0.5, double acting 0.3 to 0.4
	Operating port	Rc1/8	Rc1/8
Weight kg		0.89	1.3

*1: Check the compatibility of product structural materials, working fluids and atmosphere.
*2: Refer to page 64 for high-pressure specifications.
*3: For double barbed fitting, fluorine lubricant is applied to the sliding surface between the front ferrule and fitting body.

⚠ Always read the precautions on Intro Pages 7 to 14 before use.

Internal structure and parts list

●AMD3*2 Series

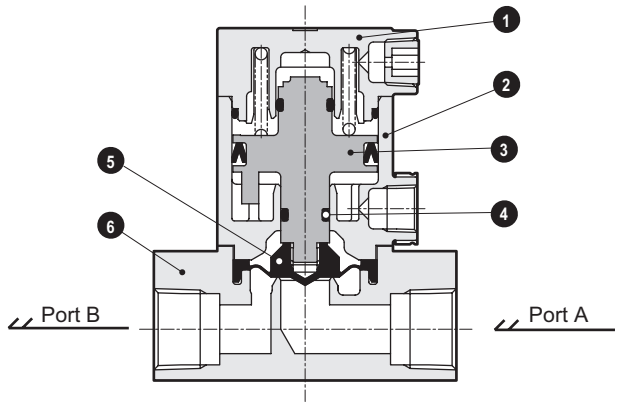

Part No.	Part name	Material (by actuator material)	
		Standard	A
1	Cover	PPS	A5056
2	Cylinder	PPS	A5056
3	Piston rod	PPS	A5056
4	O-ring	EPDM	
5	Diaphragm	PTFE	
6	Body	SUS316L	

The material and structure may vary depending on the model number. Contact CKD for details.

●AMD4*2 Series

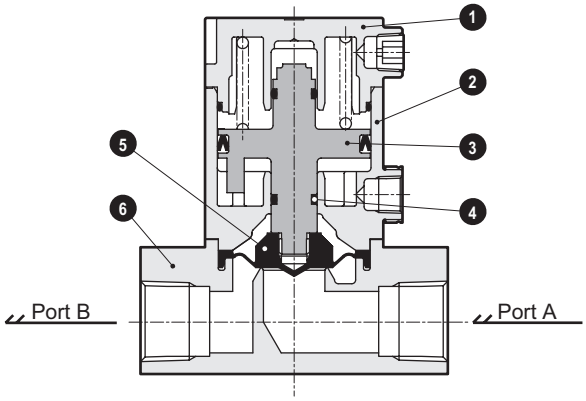

Part No.	Part name	Material (by actuator material)	
		Standard	A
1	Cover	PPS	A5056
2	Cylinder	PPS	A5056
3	Piston rod	PPS	A5056
4	O-ring	EPDM	
5	Diaphragm	PTFE	
6	Body	SUS316L	

The material and structure may vary depending on the model number. Contact CKD for details.

●AMD5*2 Series

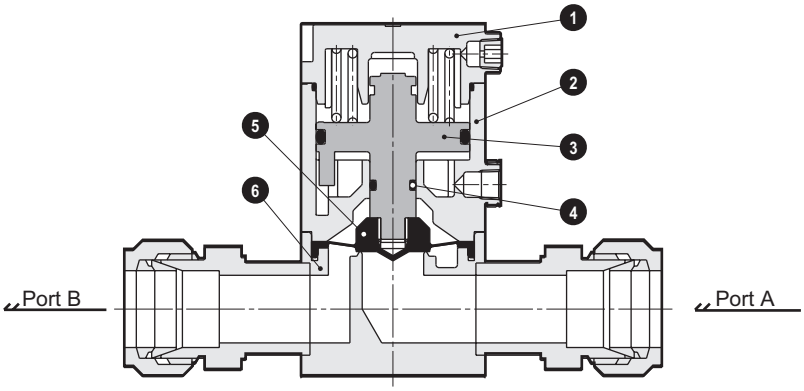

Part No.	Part name	Material (by actuator material)	
		Standard	A
1	Cover	PPS	A5056
2	Cylinder	PPS	A5056
3	Piston rod	PPS	A5056
4	O-ring	EPDM	
5	Diaphragm	PTFE	
6	Body	SUS316L	

The material and structure may vary depending on the model number. Contact CKD for details.

How to order

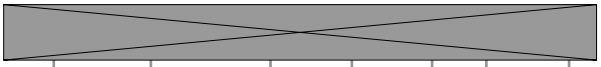

Model No.
❷ Connection
❻ Operating port direction
❺ Body treatment
❹ Actuator material
❶ Actuation
❸ Option

❷ Connection	8	3BT	6S	10	4BT	8S
	Rc 1/4	3/8" ×t1.0 SUS tube	3/8"tube connection Double barbed fitting	Rc3/8	1/2" ×t1.24 SUS tube	1/2"tube connection Double barbed fitting

Code	Description \ Orifice size	ø8			ø10		
❶ Actuation							
1	NC (normally closed)	●	●	●	●	●	●
2	NO (normally open)	●	●	●	●	●	●
3	Double acting	●	●	●	●	●	●
❸ Option							
0	ON/OFF only	●	●	●	●	●	●
1	With flow rate adjustment	●	●	●	●	●	●
6	With indicator	●	●	●	●	●	●
❹ Actuator material							
Blank	PPS	●	●	●	●	●	●
A	A5056	●	●	●	●	●	●
❺ Body treatment							
Blank	None	●	●	●	●	●	●
E	With electrolytic polishing		●	●		●	●
❻ Operating port direction							
4	With valve viewed from above, ⟵ indicates fluid flow direction ⟸ and operating port direction.	●	●	●	●	●	●
1		●	●	●	●	●	●
2		●	●	●	●	●	●
3		●	●	●	●	●	●

* Body electropolished products must be manufactured on a case-by-case basis.

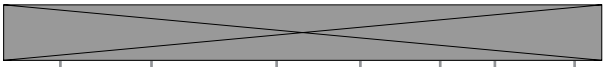

Model No.
❷ Connection
❶ Actuation
❸ Option
❹ Actuator material
❺ Body treatment
❻ Operating port direction

❷ Connection	15	6BT	12S
	Rc1/2	3/4" ×t1.24 SUS tube	3/4"tube connection Double barbed fitting

Code	Description \ Orifice size	ø16		
❶ Actuation				
1	NC (normally closed)	●	●	●
2	NO (normally open)	●	●	●
3	Double acting	●	●	●
❸ Option				
0	ON/OFF only	●	●	●
1	With flow rate adjustment	●	●	●
6	With indicator	●	●	●
❹ Actuator material				
Blank	PPS	●	●	●
A	A5056	●	●	●
❺ Body treatment				
Blank	None	●	●	●
E	With electrolytic polishing		●	●
❻ Operating port direction				
4	With valve viewed from above, ⟵ indicates fluid flow direction ⟸ and operating port direction.	●	●	●
1		●	●	●
2		●	●	●
3		●	●	●

* Body electropolished products must be manufactured on a case-by-case basis.

Precautions for model No. selection

* Consult with CKD for connections other than the ones listed.
* Connection Rc is not compatible with electrolytic polishing specifications.

How to order

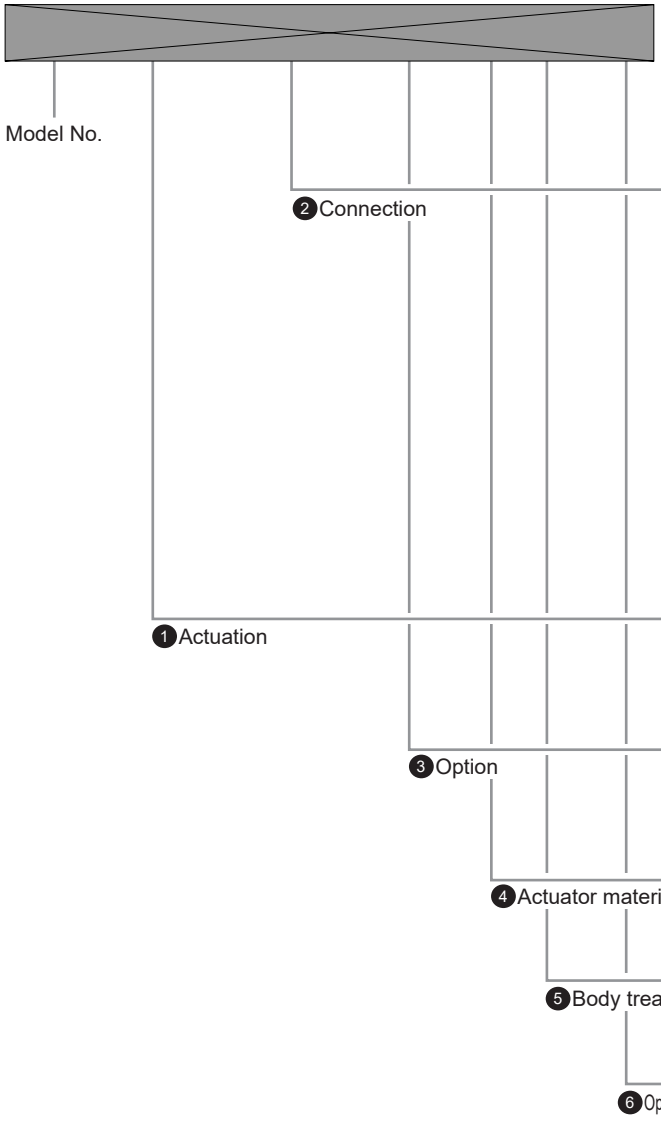

❷ Connection	8BT	16S
	1"×t1.65SUS tube	1"tube connection Double barbed fitting

Code	Description \ Orifice size	ø20	
❶ Actuation			
1	NC (normally closed)	●	●
2	NO (normally open)	●	●
3	Double acting	●	●
❸ Option			
0	ON/OFF only	●	●
1	With flow rate adjustment	●	●
6	With indicator	●	●
❹ Actuator material			
Blank	PPS	●	●
A	A5056	●	●
❺ Body treatment			
Blank	None	●	●
E	With electrolytic polishing	●	●
❻ Operating port direction			
4	With valve viewed from above, ⟵ indicates fluid flow direction ⇦ and operating port direction.	●	●
1		●	●
2		●	●
3		●	●

Body electropolished products must be manufactured on a case-by-case basis.

Dimensions

●Rc thread

・AMD3$^{1}_{2}$$_{3}$2-8/10

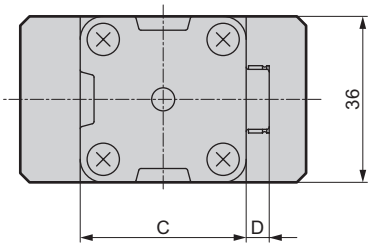

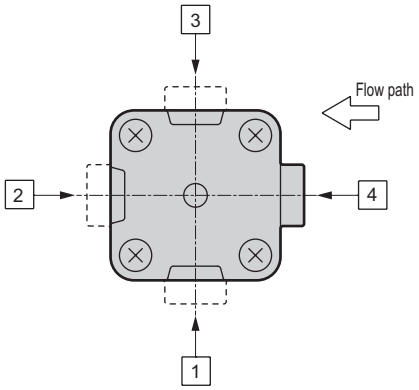

(Operating port direction)

Actuator material	C	D
Blank	36	5
A	44	0

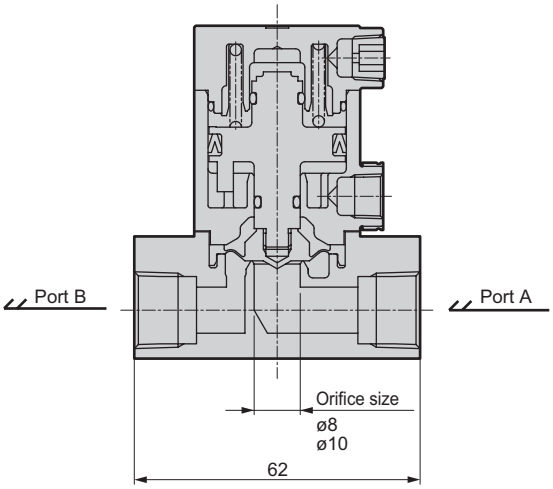

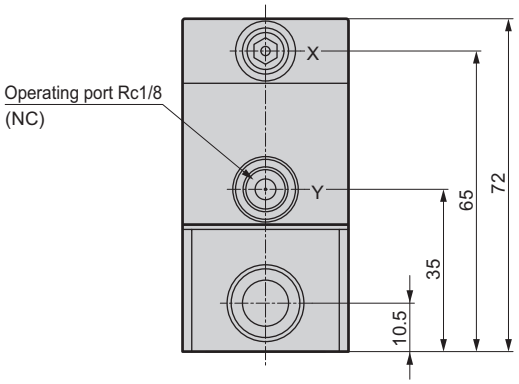

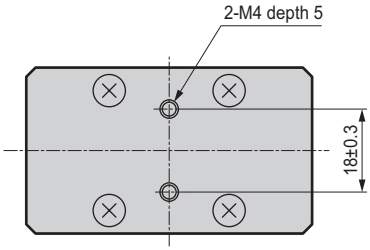

Dimensions

●SUS tube

・AMD3$^{1}_{2}_{3}$ 2-3BT/4BT

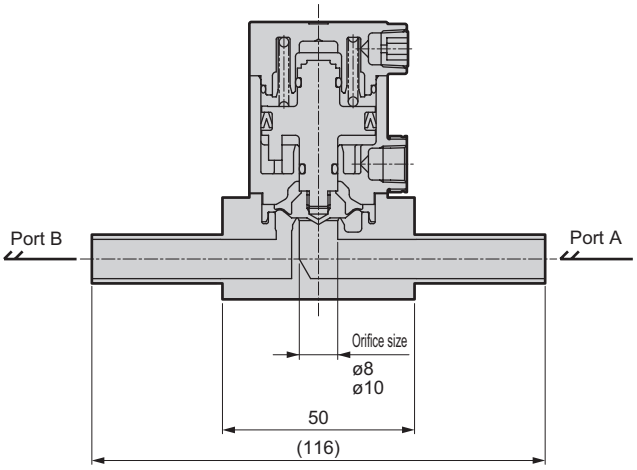

●Double barbed fitting

・AMD3$^{1}_{2}_{3}$ 2-6S/8S

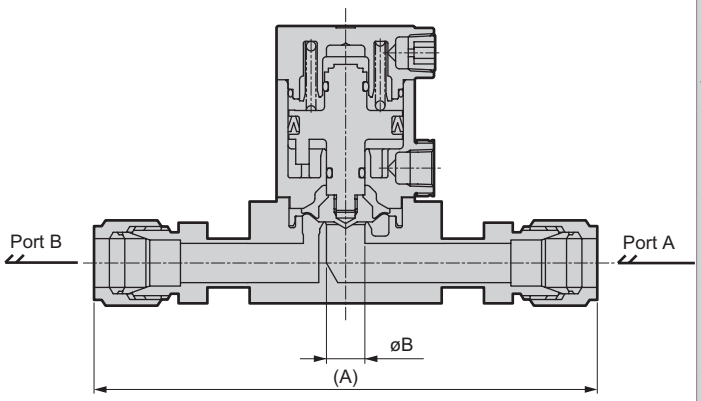

Dimensions / Model No.	A	B
AMD3*2-6S	116	8
AMD3*2-8S	130	10

●With flow rate adjustment

・AMD3$^{1}_{2}_{3}$ 2-*-1

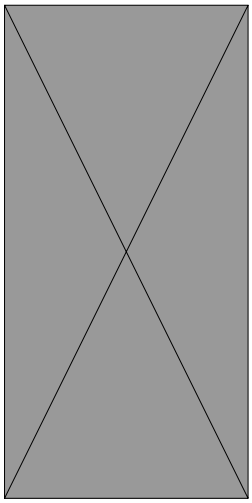

●With indicator

・AMD3$^{1}_{2}_{3}$ 2-*-6

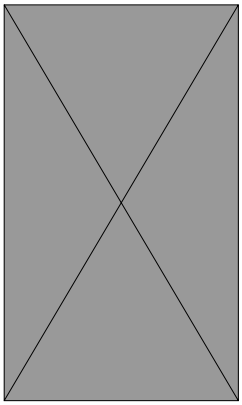

Actuator material	E
Blank	75
A	74

Dimensions

●Rc thread

・AMD4$^{1}_{2}$$_{3}$2-15

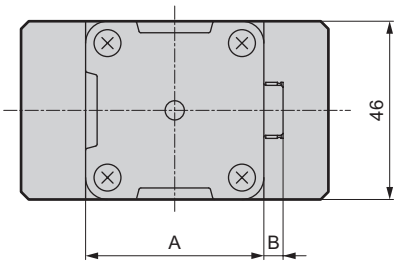

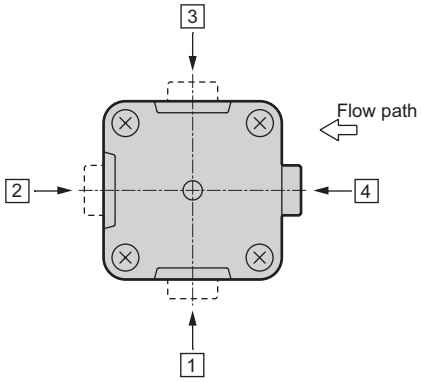

(Operating port direction)

Actuator material	A	B
Blank	46	5
A	56	0

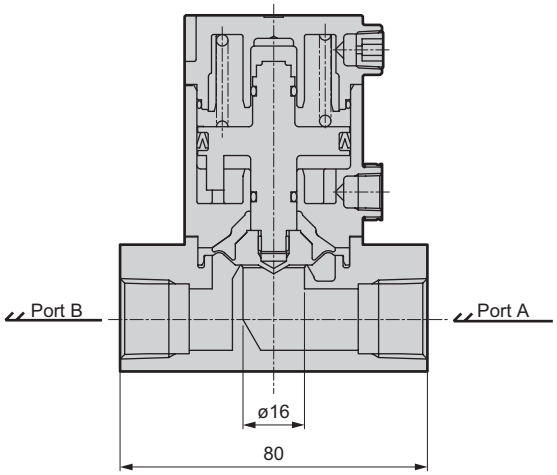

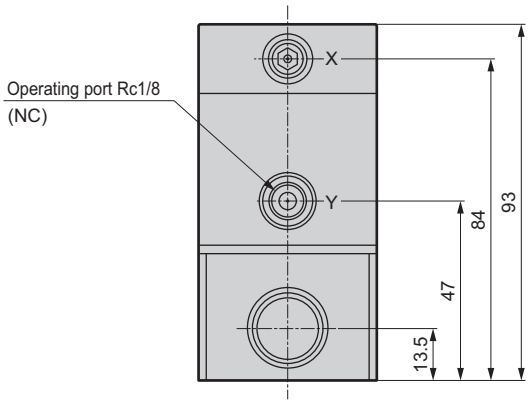

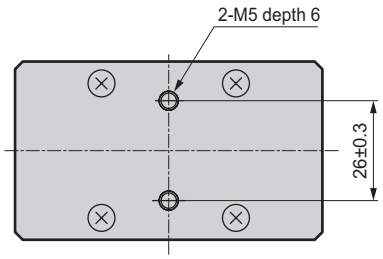

Dimensions

●SUS tube

・AMD4$^{1}_{2}_{3}$ 2-6BT

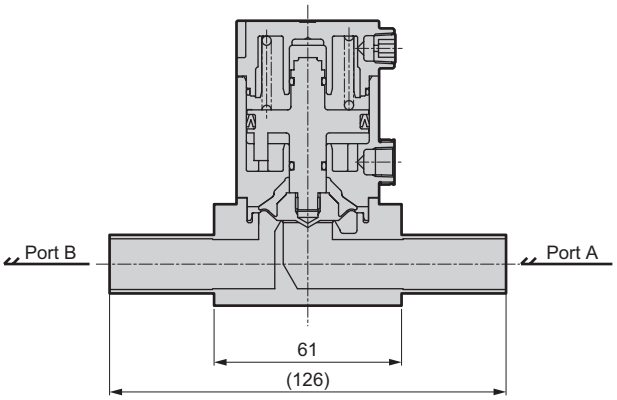

●Double barbed fitting

・AMD4$^{1}_{2}_{3}$ 2-12S

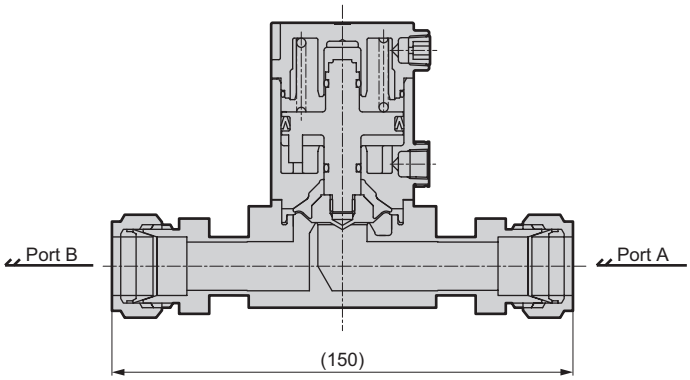

●With flow rate adjustment

・AMD4$^{1}_{2}_{3}$ 2-*-1

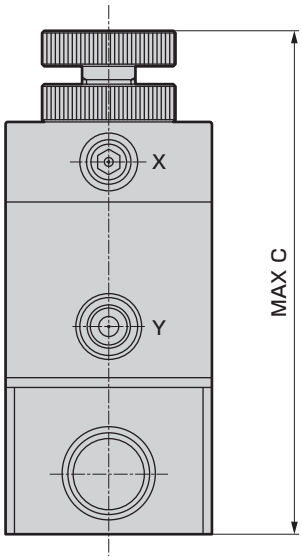

Actuator material	C
Blank	117
A	119

●With indicator

・AMD4$^{1}_{2}_{3}$ 2-*-6

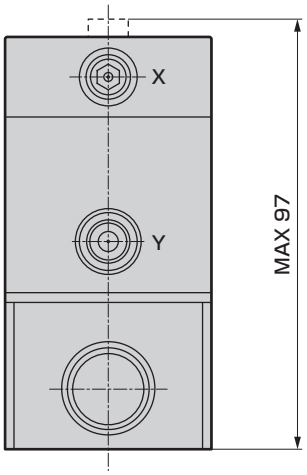

Dimensions

●Double barbed fitting

・AMD5$^{1}_{2}$$_{3}$2-16S

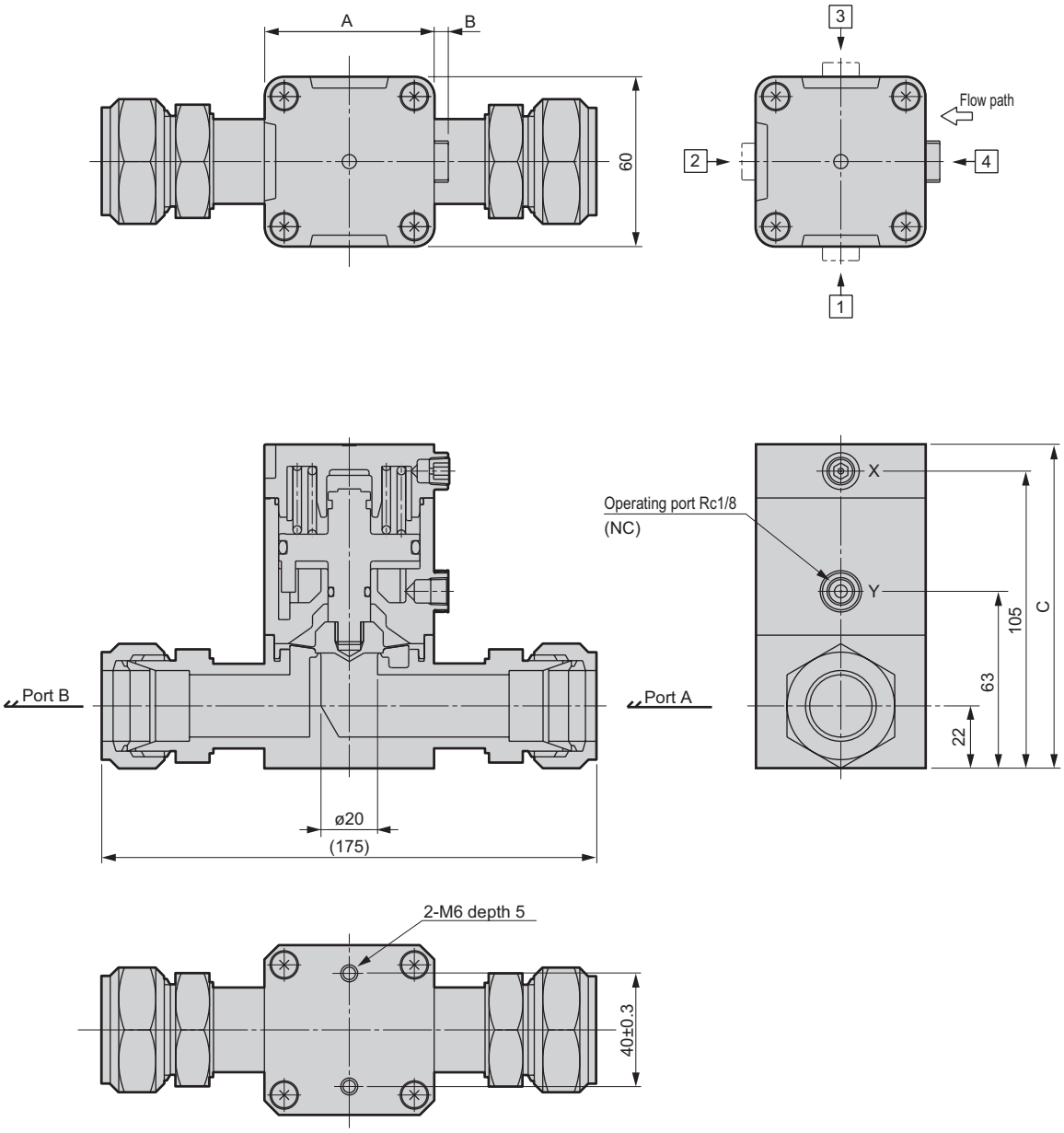

Actuator material	A	B	C
Blank	60	5	115
A	70	0	114

Dimensions

●SUS tube

・AMD5$^{1}_{2}_{3}$ 2-8BT

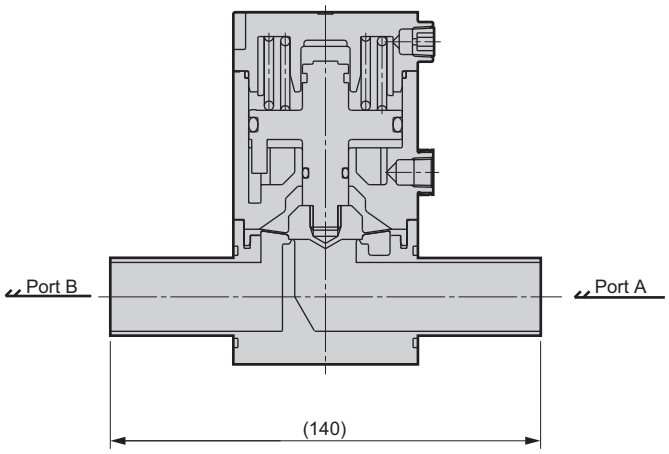

●With flow rate adjustment

・AMD5$^{1}_{2}_{3}$ 2-*-1

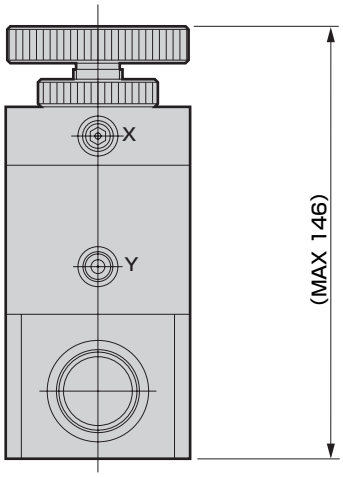

●With indicator

・AMD5$^{1}_{2}_{3}$ 2-*-6

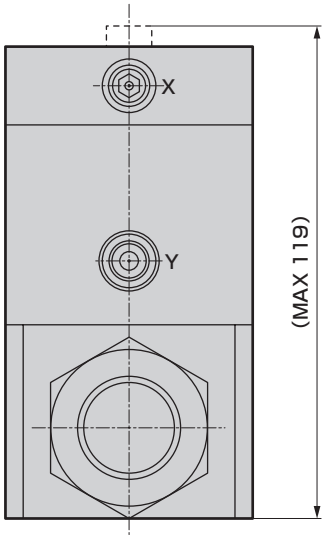

Flow characteristics

AMD0□2 to AMD5□2

●Flow characteristics (water)
Differential pressure - internal flow rate ( ): Cv

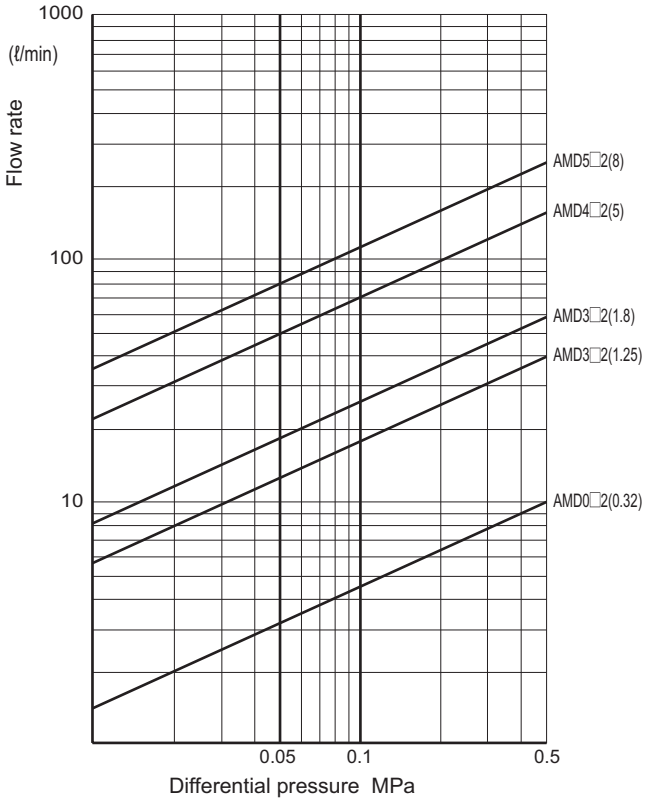

●Bypass Flow characteristics (water)
Differential pressure - internal flow rate ( ): Cv

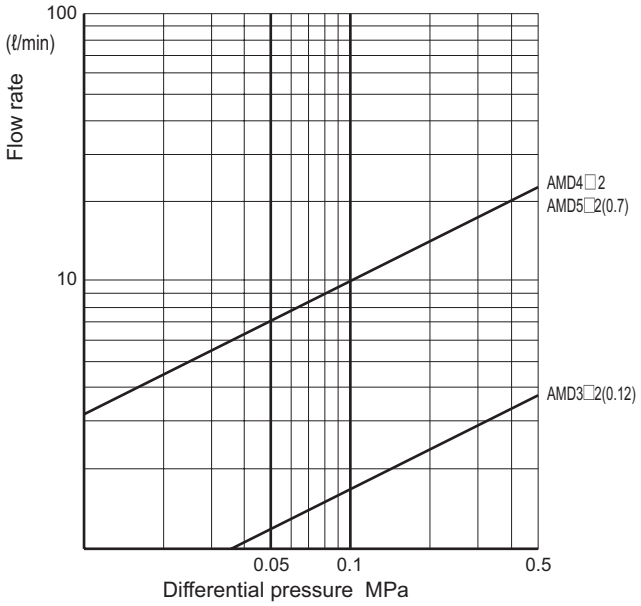

Flow characteristics

AMD0□2 to AMD5□2

●With flow rate adjustment (water)
Rotations - flow rate

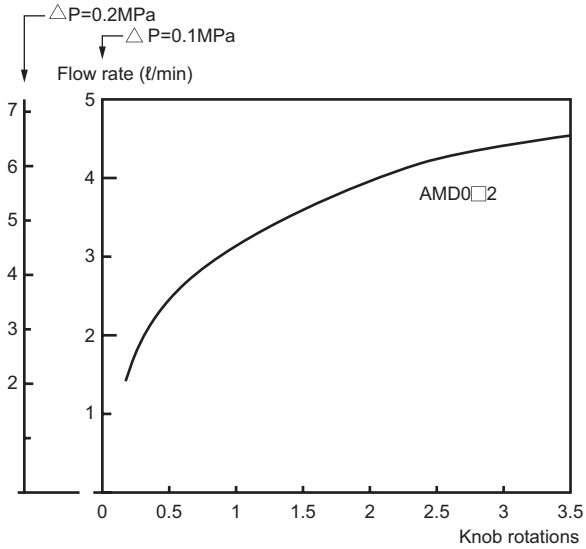

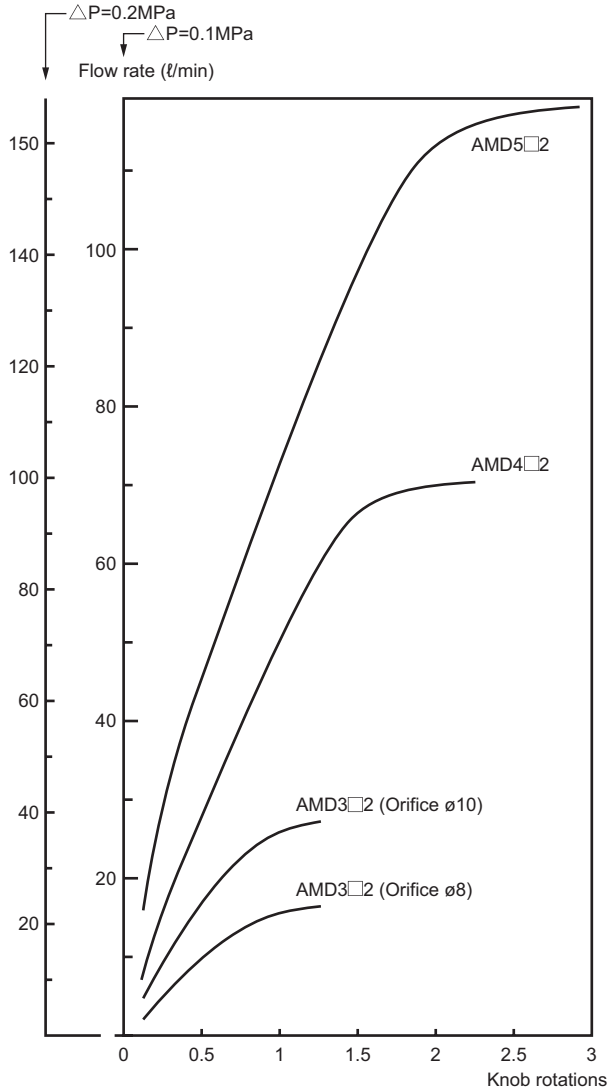

*1: Vibration and flow rate fluctuation may occur depending on the working conditions such as fluid temperature, differential pressure, and opening. Confirm that the product is acceptable under actual working conditions before use. For precise flow rate adjustment, select the FMD Series or Fine flow rate adjusting valve (LYX).

●With bypass (water)
Rotations - flow rate

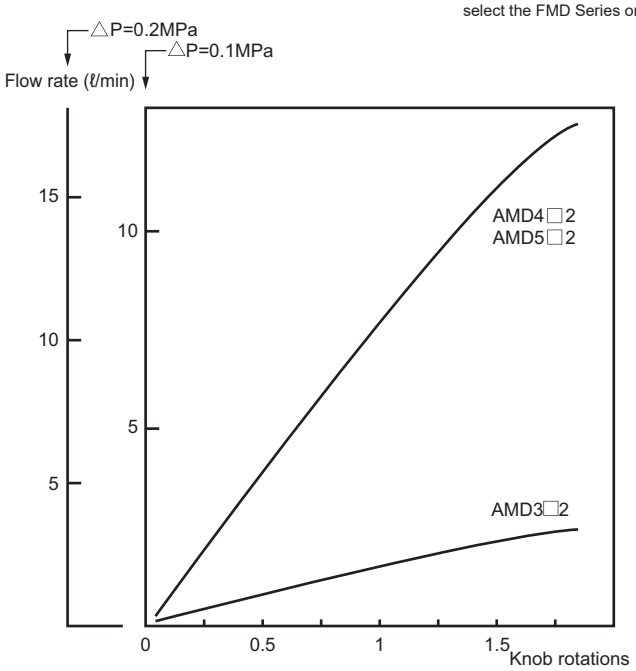

Air operated valve for chemical liquids (3-port valve)

AMG$^{3}_{4}_{5}$02 Series

● Connection tube size: ø10, ø12, ø25, 3/8″, 1/2″, 3/4″, 1”

RoHS Export controlled items

*Eligibility: AMG402 and 502 only

Specifications

Item		AMG302	AMG402	AMG502
Working fluid		Chemical liquids, pure water, air, N_2 gas (*1)		
Fluid temperature	°C	5 to 90 (For high temperature: 5 to 160) (*5)		5 to 90 (*5)
Proof pressure	MPa	1.0		
Working pressure (A→B)	MPa	0 to 0.3 (*4...High pressure specification)		
Working pressure (B→A)	MPa	0 to 0.1 (*4...High pressure specification)		
Valve seat leakage	cm^3/min	0 (water pressure)		
Back pressure	MPa	0 to 0.1 (*4...High pressure specification)		
Ambient temperature	°C	0 to 60		
Frequency		30 cycles/min. or less	20 cycles/min. or less	
Mounting orientation		Unrestricted		
Connection		O.D. ø10/ø12 tube connection (integrated fitting) O.D. 3/8", 1/2" tube connection (integrated fitting)	O.D. 3/4” tube connection (integrated fitting)	O.D. ø25 tube connection (integrated fitting) O.D. 1" tube connection (integrated fitting)
Orifice size		ø6 to ø10 (*3)	ø14.7 to ø16 (*3)	ø20
Operating section	Operating pressure MPa	0.3 to 0.5 (0.3 to 0.35 for high temperature)		
	Operating port	Rc1/8 (*2)		
Weight	kg	0.44	1.0	2.1

*1: Check the compatibility of product structural materials, working fluids and atmosphere.
*2: Use a resin fitting for connection to the operating port. (When using a metal fitting, select one with reinforcing ring. However, a reinforcing ring cannot be selected for those with fluid code P for nitric acid and hydrofluoric acid.)
*3: Check the orifice of each connection in How to order.
*4: Refer to page 64 for high-pressure specifications.
*5: For use with hydrofluoric acid, or when the fluid temperature exceeds 40°C, consult with CKD.

⚠ Always read the precautions on Intro Pages 7 to 14 before use.

Internal structure and parts list

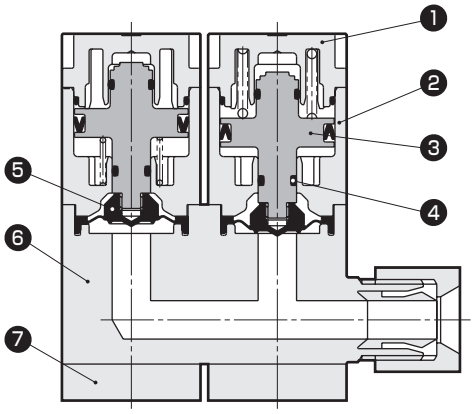

Part No.	Part name	Material (by fluid code)		
		Standard/Y	M	P
1	Cover	PPS		PP
2	Cylinder	PPS		PP
3	Piston rod	PPS		PVDF
4	O-ring	FKM	EPDM	FKM
5	Diaphragm	PTFE		
6	Body	PTFE		
7	Mounting plate	PPS		PP

The material and structure may vary depending on the model number.
Contact CKD for details.

How to order

●AMG302 Series (connection: ø10, 3/8" tube connection)

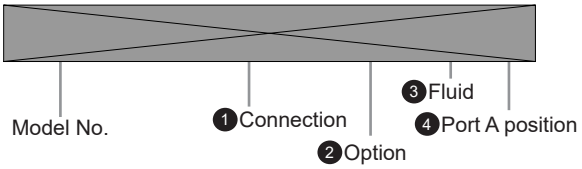

		❶ Connection										
		10US	10BUS	10UP	10BUP	10UA	10BUA	10UR	10BUR	10UK	10BUK	10BUW
		Super Type Pillar fitting Integrated		Super 300 Pillar fitting P series integrated		F-LOCK 20A Series Integrated fitting		F-LOCK 60 Series Integrated fitting		Final Lock Fitting Integrated		Flaretek Fitting Integrated
		ø10 x ø8 tube connection	3/8" × 1/4" tube connection	ø10 x ø8 tube connection	3/8" × 1/4" tube connection	ø10 x ø8 tube connection	3/8" × 1/4" tube connection	ø10 x ø8 tube connection	3/8" × 1/4" tube connection	ø10 x ø8 tube connection	3/8" × 1/4" tube connection	3/8" × 1/4" tube connection
Code	Orifice size / Description	ø8						ø7	ø6	ø8		ø6.3
Body material		PTFE machined body										
❷ Option												
0	ON/OFF only	●	●	●	●	●	●	●	●	●	●	●
1	With flow rate adjustment	●	●	●	●	●	●	●	●	●	●	●
6	With indicator	●	●	●	●	●	●	●	●	●	●	●
❸ Fluid												
Blank	Standard	●	●	●	●	●	●	●	●	●(*1)	●(*1)	●
M	For ammonia	●	●	●	●	●	●	●	●	●(*1)	●(*1)	●
P	For nitric acid, for hydrofluoric acid (*3)	●	●	●	●	●	●	●	●	●(*1)	●(*1)	●
Y	For high temperature (5 to 160°C) (*2)	●	●	●	●	●	●			●(*1)	●(*1)	
❹ Port A position												
Blank	Right	●	●	●	●	●	●	●	●	●	●	●
L	Left	●	●	●	●	●	●	●	●	●	●	●

* Machined PTFE products will be manufactured on a per-order basis.

●Model No. of operating port with reinforcing ring

AMG302 - ❶ - ❷ - ❸❹ R

R: With reinforcing ring

Precautions for model No. selection

*1: Since the Final Lock Fitting Nut and operating air piping may interfere, be sure to check the dimensions before making the selection.
*2: It cannot be used for nitric acid or hydrofluoric acid.
*3: If P is selected in ❸, R with reinforcing ring cannot be selected.

How to order

●AMG302 Series (connection: ø12,1/2" tube connection)

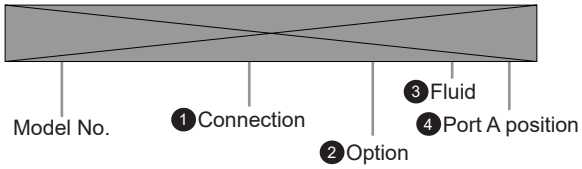

		❶ Connection										
		12US	15BUS	12UP	15BUP	12UA	15BUA	12UR	15BUR	12UK	15BUK	15BUW
		Super Type Pillar fitting Integrated		Super 300 Pillar fitting P series integrated		F-LOCK 20A Series Integrated fitting		F-LOCK 60 Series Integrated fitting		Final Lock Fitting Integrated		Flaretek Fitting Integrated
		ø12 x ø10 tube connection	1/2" ×3/8" tube connection	ø12 x ø10 tube connection	1/2" ×3/8" tube connection	ø12 x ø10 tube connection	1/2" ×3/8" tube connection	ø12 x ø10 tube connection	1/2" ×3/8" tube connection	ø12 x ø10 tube connection	1/2" ×3/8" tube connection	1/2" ×3/8" tube connection
Code	Orifice size / Description	ø10						ø9		ø10		ø9.4
Body material		PTFE machined body										
❷ Option												
0	ON/OFF only	●	●	●	●	●	●	●	●	●	●	●
1	With flow rate adjustment	●	●	●	●	●	●	●	●	●	●	●
6	With indicator	●	●	●	●	●	●	●	●	●	●	●
❸ Fluid												
Blank	Standard	●	●	●	●	●	●	●	●	●(*1)	●(*1)	●
M	For ammonia	●	●	●	●	●	●	●	●	●(*1)	●(*1)	●
P	For nitric acid, for hydrofluoric acid (*3)	●	●	●	●	●	●	●	●	●(*1)	●(*1)	●
Y	For high temperature (5 to 160°C) (*2)	●	●	●	●	●	●			●(*1)	●(*1)	
❹ Port A position												
Blank	Right	●	●	●	●	●	●	●	●	●	●	●
L	Left	●	●	●	●	●	●	●	●	●	●	●

* Machined PTFE products will be manufactured on a per-order basis.

●Model No. of operating port with reinforcing ring

AMG302 - ❶ - ❷ - ❸❹ R

With reinforcing ring

Precautions for model No. selection

*1: Since the Final Lock Fitting Nut and operating air piping may interfere, be sure to check the dimensions before making the selection.
*2: It cannot be used for nitric acid or hydrofluoric acid.
*3: If P is selected in ❸, R with reinforcing ring cannot be selected.

How to order

●AMG402 Series

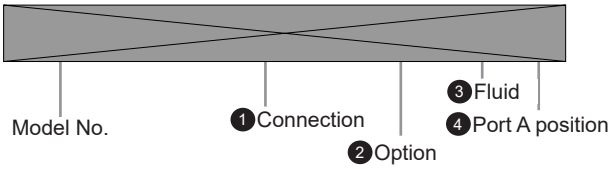

		❶ Connection					
		20BUS	20BUP	20BUA	20BUR	20BUK	20BUW
		Super-type pillar integrated fitting	Super 300 type Pillar fitting P Series integrated	F-LOCK 20A Series Integrated fitting	F-LOCK 60 Series integrated fitting	Final Lock Integrated fitting	Flaretek Fitting Integrated
		3/4"/8" tube connection					
Code	Orifice size / Description	ø16			ø15	ø16	ø14.7
Body material		PTFE machined body					
❷ Option							
0	ON/OFF only	●	●	●	●	●	●
1	With flow rate adjustment	●	●	●	●	●	●
6	With indicator	●	●	●	●	●	●
❸ Fluid							
Blank	Standard	●	●	●	●	●	●
M	For ammonia	●	●	●	●	●	●
P	For nitric acid, for hydrofluoric acid (*2)	●	●	●	●	●	●
Y	For high temperature (5 to 160°C) (*1)	●	●	●		●	
❹ Port A position							
Blank	Right	●	●	●	●	●	●
L	Left	●	●	●	●	●	●

* Machined PTFE products will be manufactured on a per-order basis.

●Model No. of operating port with reinforcing ring

AMG402 - ❶ - ❷ - ❸❹ R

With reinforcing ring

Precautions for model No. selection

*1: It cannot be used for nitric acid or hydrofluoric acid.
*2: If P is selected in ❸, R with reinforcing ring cannot be selected.

How to order

●AMG502 Series

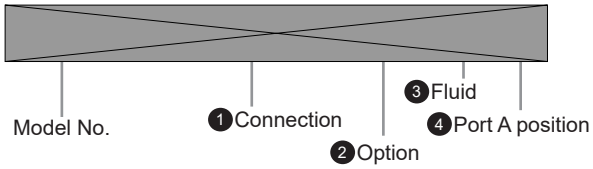

		❶ Connection									
		25US	25BUS	25UP	25BUP	25BUA	25UR	25BUR	25UK	25BUK	25BUW
		Super Type Pillar fitting Integrated		Super 300 Pillar fitting P series integrated		F-LOCK 20A Series Integrated fitting	F-LOCK 60 Series Integrated fitting		Final Lock Fitting Integrated		Flaretek Fitting Integrated
		ø25 × ø22 tube connection	1" ×7/8" tube connection	ø25 × ø22 tube connection	1" ×7/8" tube connection	1" ×7/8" tube connection (*1)	ø25 × ø22 tube connection	1" ×7/8" tube connection	ø25 × ø22 tube connection	1" ×7/8" tube connection	1" ×7/8" tube connection
Code	Orifice size / Description	ø20									
Body material		PTFE machined body									
❷ Option											
0	ON/OFF only	●	●	●	●	●	●	●	●	●	●
1	With flow rate adjustment	●	●	●	●	●	●	●	●	●	●
6	With indicator	●	●	●	●	●	●	●	●	●	●
❸ Fluid											
Blank	Standard	●	●	●	●	●	●	●	●	●	●
M	For ammonia	●	●	●	●	●	●	●	●	●	●
P	For nitric acid, for hydrofluoric acid (*2)	●	●	●	●	●	●	●	●	●	●
❹ Port A position											
Blank	Right	●	●	●	●	●	●	●	●	●	●
L	Left	●	●	●	●	●	●	●	●	●	●

* Machined PTFE products will be manufactured on a per-order basis.

●Model No. of operating port with reinforcing ring

AMG502 - ❶ - ❷ - ❸❹ R

R: With reinforcing ring

Precautions for model No. selection

*1: Can also be used for ø25 x ø22 tube connection.
*2: If P is selected in ❸, R with reinforcing ring cannot be selected.

Dimensions

●ON/OFF only

- ·AMG302- *1
- ·AMG402- *1
- ·AMG502- *1

Note: NC and NO arrangements differ by port A position.
The valve close to the port A side is NC, while the other is NO.

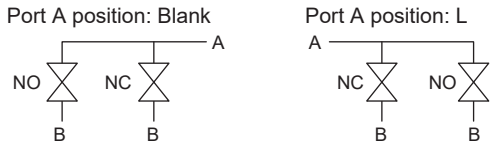

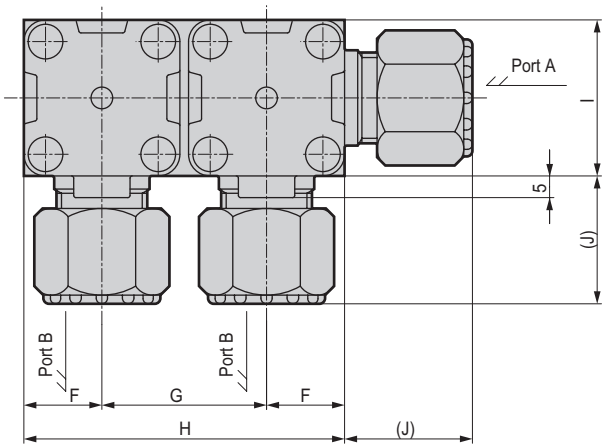

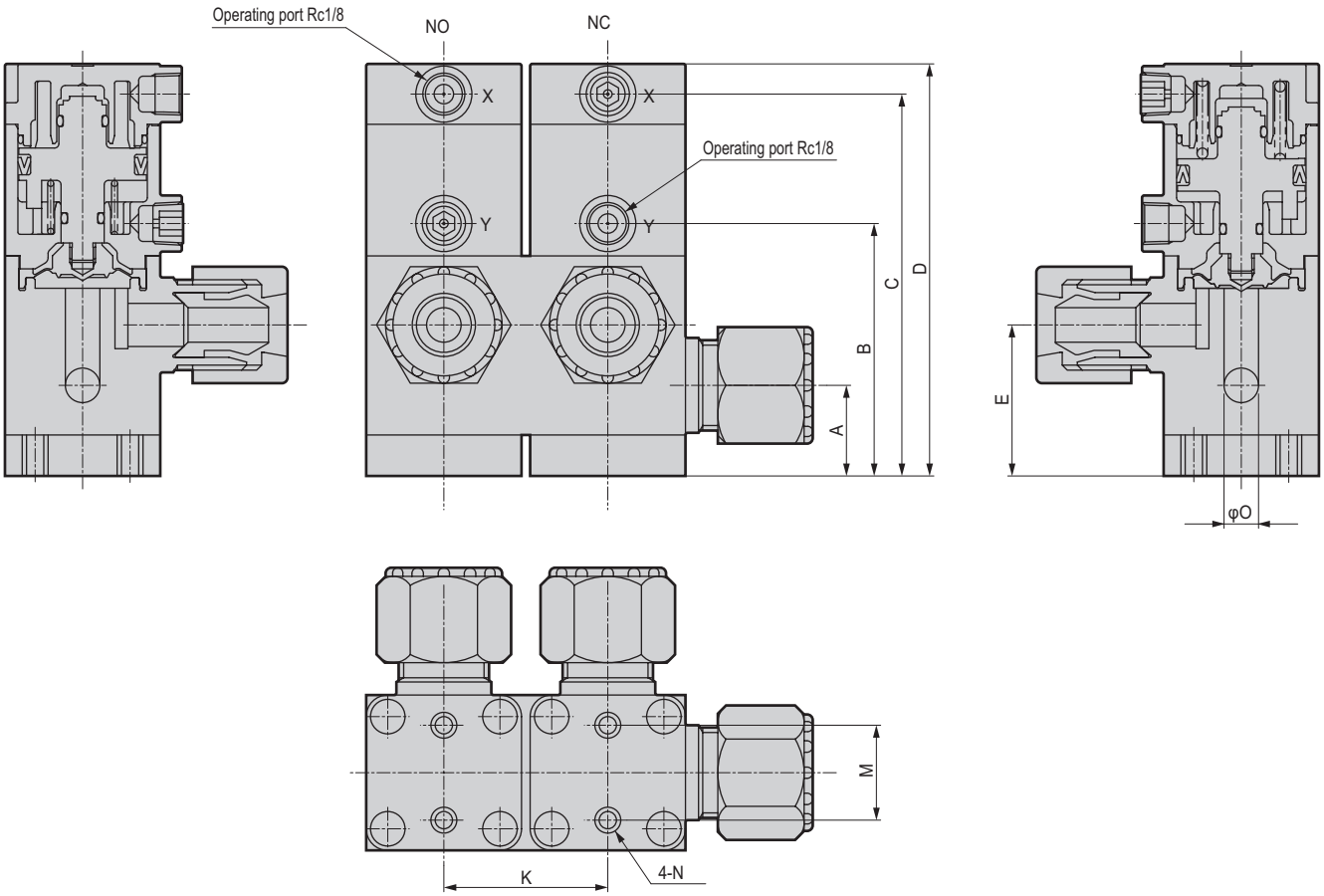

Dimensions

Model No.	A	B	C	D (by fluid code)		E	F	G	H	I	K	M	N
				Blank/M/Y	P								
AMG302	21	59	89	96	96	35	18	38	74	36	38±0.3	22±0.3	M6 depth 9
AMG402	27	79	116	125	126	46	23	48	94	46	48±0.4	28±0.3	M8 depth 10
AMG502	35	101	143	153	157	60	30	62	122	60	62±0.4	40±0.3	M8 depth 13

AMG3 (10 mm / 3/8")

*1 (Connector No.)	J	O
10US	25	8
10BUS	25	8
10UP	25	8
10BUP	25	8
10UA	21	8
10BUA	21	8
10UR	37	7
10BUR	39	6
10UK	30	8
10BUK	30	8
10BUW	31	6.3

AMG3(12mm / 1/2")

*1 (Connector No.)	J	O
12US	29.5	10
15BUS	29.5	10
12UP	29	10
15BUP	29	10
12UA	25	10
15BUA	25	10
12UR	37	9
15BUR	39	9
12UK	33	10
15BUK	33	10
15BUW	33.5	9.4

AMG4

*1 (Connector No.)	J	O
20BUS	39	16
20BUP	36	16
20BUA	31	16
20BUR	44	15
20BUK	36.5	16
20BUW	38	14.7

AMG5

*1 (Connector No.)	J	O
25US	43.5	20
25BUS	43.5	20
25UP	43	20
25BUP	43	20
25BUA	40	20
25UR	49.5	20
25BUR	51	20
25UK	40.5	20
25BUK	40.5	20
25BUW	48	20

●With flow rate adjustment

・AMG*02-*-1

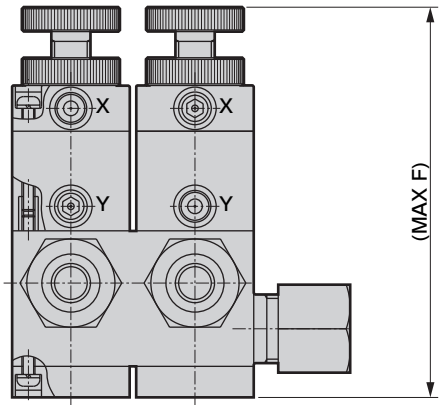

●With indicator

・AMG*02-*-6

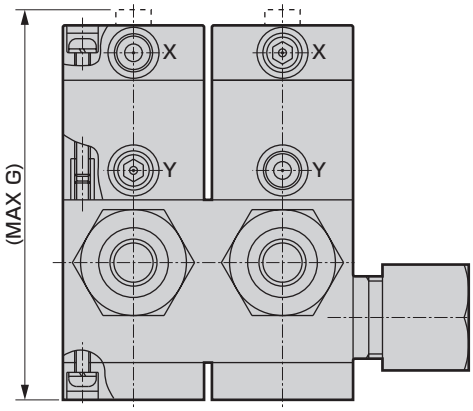

Model No.	F (by fluid code)		G (by fluid code)	
	Blank/M/Y	P	Blank/M/Y	P
AMG302	120	120	98	98
AMG402	149	152	129	130
AMG502	185	192	158	162

Air operated valve for chemical liquids (manifold/branch valve)

GAMD$^{3}_{4}_{5}$*2 Series

- Station No. 1 to 5 stations
- Connection tube size: ø10, ø12, ø25, 3/8″, 1/2″, 3/4″, 1"

RoHS

Export controlled items

*Eligibility: GAMD4*2, 5*2 (*6)

Specifications

Item		GAMD3*2	GAMD4*2	GAMD5*2
Working fluid		Chemical liquids, pure water, air, N_2 gas (*1)		
Fluid temperature °C		5 to 90 (For high temperature: 5 to 160) (*5)		5 to 90 (*5)
Proof pressure MPa		1.0		
Working pressure (A→B) MPa		0 to 0.3 (*4...High pressure specification)		
Working pressure (B→A) MPa		0 to 0.1 (*4...High pressure specification)		
Valve seat leakage cm^3/min		0 (water pressure)		
Back pressure MPa		0 to 0.1 (*4...High pressure specification)		
Ambient temperature°C		0 to 60		
Frequency		30 cycles/min. or less	20 cycle/min. or less	
Mounting orientation		Unrestricted		
Connection		O.D. ø10/ø12 tube connection (integrated fitting) O.D. 3/8" / 1/2" tube connection (integrated fitting)	O.D. 3/4" tube connection (integrated fitting)	O.D. ø25 tube connection (integrated fitting) O.D. 1" tube connection (integrated fitting)
Orifice size		ø6 to ø10 (*3)	ø14.7 to ø16 (*3)	ø20
Operating section	Operating pressure MPa	NC: 0.3 to 0.5, NO: 0.3 to 0.5 (0.3 to 0.35 for high temperature), double acting 0.3 to 0.4 (0.2 to 0.25 for high temperature)		
	Operating port	Rc1/8 (*2)		
Weight kg	1 station	0.25	0.51	1.0
	2 stations	0.50	1.0	2.0
	3 stations	0.75	1.5	3.0
	4 stations	1.0	2.0	4.0
	5 stations	1.3	2.5	—

*1: Check the compatibility of product structural materials, working fluids and atmosphere.
*2: Use a resin fitting for connection to the operating port. (When using a metal fitting, select one with a reinforcing ring. However, a reinforcing ring cannot be selected for those with fluid code P for nitric acid and hydrofluoric acid.)
*3: Check the orifice of each connection in How to order.
*4: Refer to page 64 for high-pressure specifications.
*5: For use with hydrofluoric acid, or when the fluid temperature exceeds 40°C, consult with CKD.
*6: GAMD3*2 is not applicable. (for individual piping of secondary side port)

Always read the precautions on Intro Pages 7 to 14 before use.

Internal structure and parts list

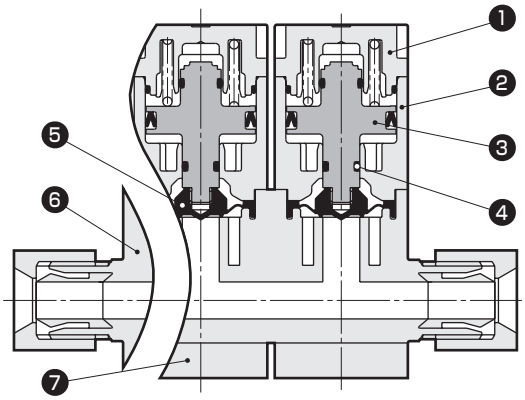

Part No.	Part name	Material (by fluid code)		
		Standard/Y	M	P
1	Cover	PPS		PP
2	Cylinder	PPS		PP
3	Piston rod	PPS		PVDF
4	O-ring	FKM	EPDM	FKM
5	Diaphragm	PTFE		
6	Body	PTFE		
7	Mounting plate	PPS		PP

The material and structure may vary depending on the model number.
Contact CKD for details.

How to order

●GAMD3*2 Series (connection: ø10, 3/8" tube connection)

GAMD3 (1) 2 - (10BUP) - (1) - (3)(M)(L)

- Model No.
- (1) ❶Actuation
- (10BUP) ❷Connection
- (1) ❸Option
- (3) ❹Station No.
- (M) ❺Fluid
- (L) ❻Port A position

		❷ Connection										
		10US	10BUS	10UP	10BUP	10UA	10BUA	10UR	10BUR	10UK	10BUK	10BUW
		Super Type Pillar fitting Integrated		Super 300 Pillar fitting P series integrated		F-LOCK 20A Series Integrated fitting		F-LOCK 60 Series Integrated fitting		Final Lock Fitting Integrated		Flaretek Fitting Integrated
		ø10 x ø8 tube connection	3/8" × 1/4" tube connection	ø10 x ø8 tube connection	3/8" × 1/4" tube connection	ø10 x ø8 tube connection	3/8" × 1/4" tube connection	ø10 x ø8 tube connection	3/8" × 1/4" tube connection	ø10 x ø8 tube connection	3/8" × 1/4" tube connection	3/8" × 1/4" tube connection
Code / Description / Orifice size		ø8						ø7	ø6	ø8		ø6.3
Body material		PTFE machined body										
❶ Actuation												
1	NC (normally closed)	●	●	●	●	●	●	●	●	●	●	●
2	NO (normally open)	●	●	●	●	●	●	●	●	●	●	●
3	Double acting	●	●	●	●	●	●	●	●	●	●	●
❸ Option												
0	ON/OFF only	●	●	●	●	●	●	●	●	●	●	●
1	With flow rate adjustment	●	●	●	●	●	●	●	●	●	●	●
6	With indicator	●	●	●	●	●	●	●	●	●	●	●
❹ Station No.												
1 to 5	One station to 5 stations	●	●	●	●	●	●	●	●	●	●	●
❺ Fluid												
Blank	Standard	●	●	●	●	●	●	●	●	●(*1)	●(*1)	●
M	For ammonia	●	●	●	●	●	●	●	●	●(*1)	●(*1)	●
P	For nitric acid, for hydrofluoric acid (*3)	●	●	●	●	●	●	●	●	●(*1)	●(*1)	●
Y	For high temperature (5 to 160°C) (*2)	●	●	●	●	●	●			●(*1)	●(*1)	
❻ Port A position												
Blank	Right	●	●	●	●	●	●	●	●	●	●	●
L	Left	●	●	●	●	●	●	●	●	●	●	●
W	Both sides	●	●	●	●	●	●	●	●	●	●	●

* Machined PTFE products will be manufactured on a per-order basis.

●Model No. of operating port with reinforcing ring (indicate R at the end of the model No.)

GAMD3 ❶ 2 - ❷ - ❸ - ❹❺❻ R

- R: With reinforcing ring

Precautions for model No. selection

*1: Since the Final Lock Fitting Nut and operating air piping may interfere, be sure to check the dimensions before making the selection.
*2: It cannot be used for nitric acid or hydrofluoric acid.
*3: If P is selected in ❺, R with reinforcing ring cannot be selected.

How to order

●GAMD3*2 Series (connection: ø12, 1/2" tube connection)

GAMD3 (1) 2 - (15BUP) - (1) - (3)(M)(W)

- GAMD3: Model No.
- (1): ❶Actuation
- (15BUP): ❷Connection
- (1): ❸Option
- (3): ❹Station No.
- (M): ❺Fluid
- (W): ❻Port A position

		❷ Connection										
		12US	15BUS	12UP	15BUP	12UA	15BUA	12UR	15BUR	12UK	15BUK	15BUW
		Super Type Pillar fitting Integrated		Super 300 Pillar fitting P series integrated		F-LOCK 20A Series Integrated fitting		F-LOCK 60 Series Integrated fitting		Final Lock Fitting Integrated		Flaretek Fitting Integrated
		ø12 x ø10 tube connection	1/2" ×3/8" tube connection	ø12 x ø10 tube connection	1/2" ×3/8" tube connection	ø12 x ø10 tube connection	1/2" ×3/8" tube connection	ø12 x ø10 tube connection	1/2" ×3/8" tube connection	ø12 x ø10 tube connection	1/2" ×3/8" tube connection	1/2" ×3/8" tube connection
Code	Orifice size / Description	ø10						ø9		ø10		ø9.4
Body material		PTFE machined body										
❶ Actuation												
1	NC (normally closed)	●	●	●	●	●	●	●	●	●	●	●
2	NO (normally open)	●	●	●	●	●	●	●	●	●	●	●
3	Double acting	●	●	●	●	●	●	●	●	●	●	●
❸ Option												
0	ON/OFF only	●	●	●	●	●	●	●	●	●	●	●
1	With flow rate adjustment	●	●	●	●	●	●	●	●	●	●	●
6	With indicator	●	●	●	●	●	●	●	●	●	●	●
❹ Station No.												
1 to 5	1 to 5 stations	●	●	●	●	●	●	●	●	●	●	●
❺ Fluid												
Blank	Standard	●	●	●	●	●	●	●	●	●(*1)	●(*1)	●
M	For ammonia	●	●	●	●	●	●	●	●	●(*1)	●(*1)	●
P	For nitric acid, for hydrofluoric acid (*3)	●	●	●	●	●	●	●	●	●(*1)	●(*1)	●
Y	For high temperature (5 to 160°C) (*2)	●	●	●	●	●	●			●(*1)	●(*1)	
❻ Port A position												
Blank	Right	●	●	●	●	●	●	●	●	●	●	●
L	Left	●	●	●	●	●	●	●	●	●	●	●
W	Both sides	●	●	●	●	●	●	●	●	●	●	●

* Machined PTFE products will be manufactured on a per-order basis.

●Model No. of operating port with reinforcing ring (indicate R at the end of the model No.)

GAMD3 (❶) 2 - (❷) - (❸) - (❹)(❺)(❻) R

- R: With reinforcing ring

Precautions for model No. selection

*1: Since the Final Lock Fitting Nut and operating air piping may interfere, be sure to check the dimensions before making the selection.
*2: It cannot be used for nitric acid or hydrofluoric acid.
*3: If P is selected in ❺, R with reinforcing ring cannot be selected.

How to order

●GAMD4*2 Series

GAMD4 (1) 2 - (20BUP) - (6) - (2) (M) (L)

- Model No.
- ❶ Actuation
- ❷ Connection
- ❸ Option
- ❹ Station No.
- ❺ Fluid
- ❻ Port A position

		❷ Connection					
		20BUS	20BUP	20BUA	20BUR	20BUK	20BUW
		Super-type pillar integrated fitting	Super 300 type Pillar fitting P Series integrated	F-LOCK 20A Series Integrated fitting	F-LOCK 60 Series Integrated fitting	Final Lock Integrated fitting	Flaretek Integrated fitting
		3/4" ×5/8" tube connection					
Code	Orifice size / Description	ø16			ø15	ø16	ø14.7
Body material		PTFE machined body					
❶ Actuation							
1	NC (normally closed)	●	●	●	●	●	●
2	NO (normally open)	●	●	●	●	●	●
3	Double acting	●	●	●	●	●	●
❸ Option							
0	ON/OFF only	●	●	●	●	●	●
1	With flow rate adjustment	●	●	●	●	●	●
6	With indicator	●	●	●	●	●	●
❹ Station No.							
1	One station	●	●	●	●	●	●
to	to						
5	5 stations						
❺ Fluid							
Blank	Standard	●	●	●	●	●	●
M	For ammonia	●	●	●	●	●	●
P	For nitric acid, for hydrofluoric acid (*2)	●	●	●	●	●	●
Y	For high temperature (5 to 160°C) (*1)	●	●	●		●	
❻ Port A position							
Blank	Right	●	●	●	●	●	●
L	Left	●	●	●	●	●	●
W	Both sides	●	●	●	●	●	●

* Machined PTFE products will be manufactured on a per-order basis.

●Model No. of operating port with reinforcing ring (indicate R at the end of the model No.)

GAMD4 (❶) 2 - (❷) - (❸) - (❹) (❺) (❻) R

- With reinforcing ring

Precautions for model No. selection

*1: It cannot be used for nitric acid or hydrofluoric acid.
*2: If P is selected in ❺, R with reinforcing ring cannot be selected.

How to order

●GAMD5*2 Series

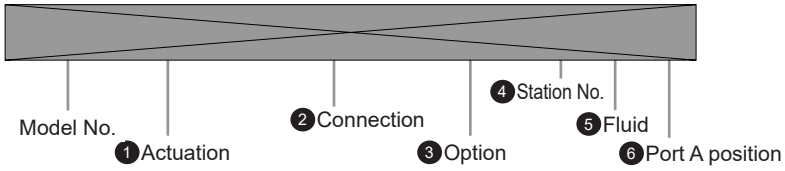

		❷ Connection									
		25US	25BUS	25UP	25BUP	25BUA	25UR	25BUR	25UK	25BUK	25BUW
		Super Type Pillar fitting Integrated		Super 300 Pillar fitting P series integrated		F-LOCK 20A Series Integrated fitting	F-LOCK 60 Series Integrated fitting		Final Lock Fitting Integrated		Flaretek Fitting Integrated
		ø25 × ø22 tube connection	1" ×7/8" tube connection	ø25 × ø22 tube connection	1" ×7/8" tube connection	1" ×7/8" tube connection (*1)	ø25 × ø22 tube connection	1" × 7/8" tube connection	ø25 × ø22 tube connection	1" × 7/8" tube connection	1" × 7/8" tube connection
Code	Orifice size / Description	ø20									
Body material		PTFE machined body									
❶ Actuation											
1	NC (normally closed)	●	●	●	●	●	●	●	●	●	●
2	NO (normally open)	●	●	●	●	●	●	●	●	●	●
3	Double acting	●	●	●	●	●	●	●	●	●	●
❸ Option											
0	ON/OFF only	●	●	●	●	●	●	●	●	●	●
1	With flow rate adjustment	●	●	●	●	●	●	●	●	●	●
6	With indicator	●	●	●	●	●	●	●	●	●	●
❹ Station No.											
1	One station	●	●	●	●	●	●	●	●	●	●
to	to										
4	4 stations										
❺ Fluid											
Blank	Standard	●	●	●	●	●	●	●	●	●	●
M	For ammonia	●	●	●	●	●	●	●	●	●	●
P	For nitric acid, for hydrofluoric acid (*2)	●	●	●	●	●	●	●	●	●	●
❻ Port A position											
Blank	Right	●	●	●	●	●	●	●	●	●	●
L	Left	●	●	●	●	●	●	●	●	●	●
W	Both sides	●	●	●	●	●	●	●	●	●	●

* Machined PTFE products will be manufactured on a per-order basis.

●Model No. of operating port with reinforcing ring (indicate R at the end of the model No.)

GAMD5 ❶ 2 - ❷ - ❸ - ❹❺❻ R

With reinforcing ring

Precautions for model No. selection

*1: Can also be used for ø25 x ø22 tube connection.
*2: If P is selected in ❺, R with reinforcing ring cannot be selected.

Dimensions

●ON/OFF only

- GAMD3*2- *1
- GAMD4*2- *1
- GAMD5*2- *1

Port A position: Blank

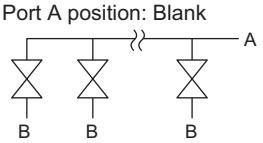

Port A position: L

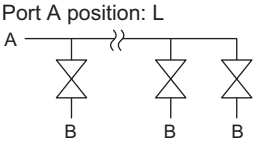

Port A position: W

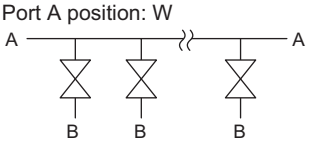

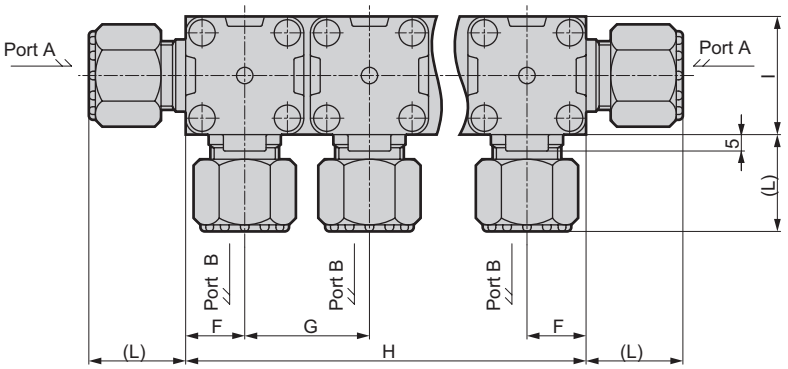

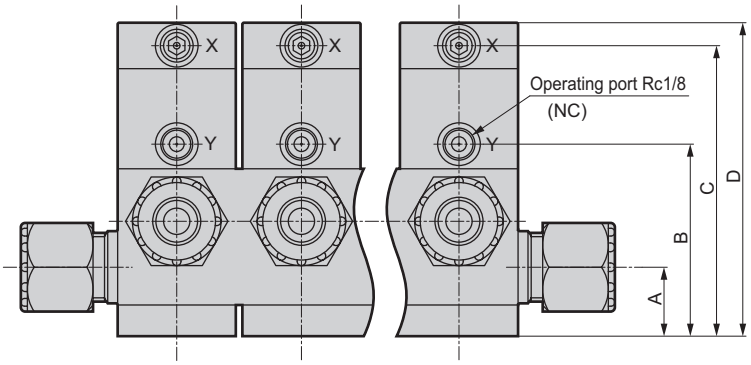

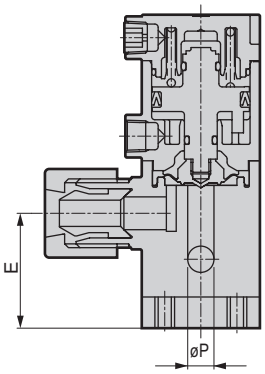

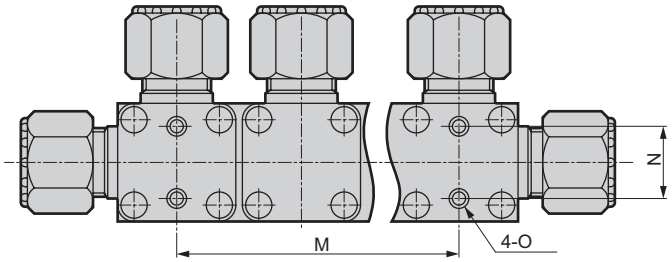

Dimensions

Station No.	Model No.	A	B	C	D (by fluid code)		E	F	G	H	I	M	N	O
					Blank/M/Y	P								
1	GAMD3*2	21	59	89	96	96	35	18	38	36	36	-	22±0.3	M6 depth 9
	GAMD4*2	27	79	116	125	126	46	23	48	46	46	-	28±0.3	M8 depth 10
	GAMD5*2	35	101	143	153	157	60	30	62	60	60	-	40±0.3	M8 depth 13
2	GAMD3*2	21	59	89	96	96	35	18	38	74	36	38±0.3	22±0.3	M6 depth 9
	GAMD4*2	27	79	116	125	126	46	23	48	94	46	48±0.4	28±0.3	M8 depth 10
	GAMD5*2	35	101	143	153	157	60	30	62	122	60	62±0.4	40±0.3	M8 depth 13
3	GAMD3*2	21	59	89	96	96	35	18	38	112	36	76±0.4	22±0.3	M6 depth 9
	GAMD4*2	27	79	116	125	126	46	23	48	142	46	96±0.5	28±0.3	M8 depth 10
	GAMD5*2	35	101	143	153	157	60	30	62	184	60	124±0.5	40±0.3	M8 depth 13
4	GAMD3*2	21	59	89	96	96	35	18	38	150	36	114±0.5	22±0.3	M6 depth 9
	GAMD4*2	27	79	116	125	126	46	23	48	190	46	144±0.5	28±0.3	M8 depth 10
	GAMD5*2	35	101	143	153	157	60	30	62	246	60	186±0.7	40±0.3	M8 depth 13
5	GAMD3*2	21	59	89	96	96	35	18	38	188	36	152±0.7	22±0.3	M6 depth 9
	GAMD4*2	27	79	116	125	126	46	23	48	238	46	192±0.7	28±0.3	M8 depth 10

GAMD3*2 (10 mm / 3/8")

*1 (Connector No.)	L	P
10US	25	8
10BUS	25	8
10UP	25	8
10BUP	25	8
10UA	21	8
10BUA	21	8
10UR	37	7
10BUR	39	6
10UK	30	8
10BUK	30	8
10BUW	31	6.3

GAMD3*2 (12 mm, 1/2")

*1 (Connector No.)	L	P
12US	29.5	10
15BUS	29.5	10
12UP	29	10
15BUP	29	10
12UA	25	10
15BUA	25	10
12UR	37	9
15BUR	39	9
12UK	33	10
15BUK	33	10
15BUW	33.5	9.4

GAMD4*2

*1 (Connector No.)	L	P
20BUS	39	16
20BUP	36	16
20BUA	31	16
20BUR	44	15
20BUK	36.5	16
20BUW	38	14.7

GAMD5*2

*1 (Connector No.)	L	P
25US	43.5	20
25BUS	43.5	20
25UP	43	20
25BUP	43	20
25BUA	40	20
25UR	49.5	20
25BUR	51	20
25UK	40.5	20
25BUK	40.5	20
25BUW	48	20

●With flow rate adjustment

・GAMD**2-*-1

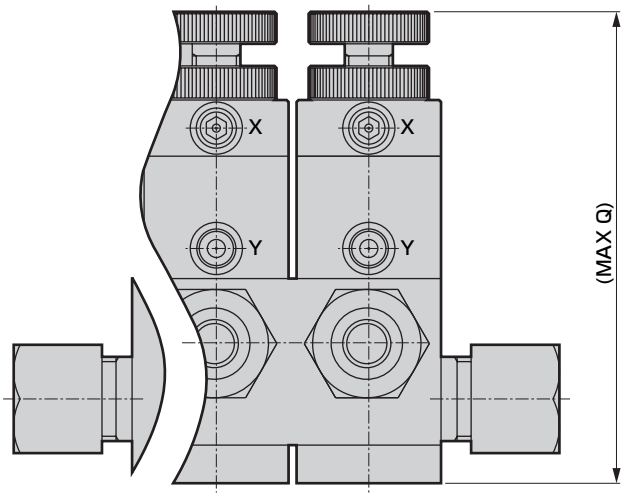

●With indicator

・GAMD**2-*-6

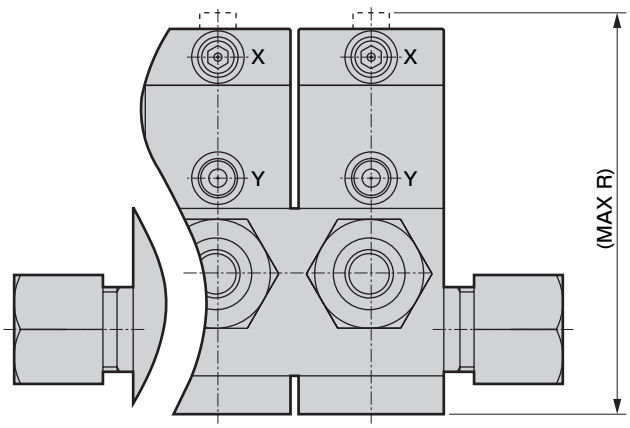

Model No.	Q (by fluid code)		R (by fluid code)	
	Blank/M/Y	P	Blank/M/Y	P
GAMD3*2	120	120	98	98
GAMD4*2	149	152	129	130
GAMD5*2	185	192	158	162

High pressure specification

AMD$^{3}_{4}{}_{5}$*2, AMG$^{3}_{4}{}_{5}$ 02, GAMD$^{3}_{4}{}_{5}$*2 Series

RoHS

Item / pressure specification		B	Q
Fluid temperature	°C	5 to 90	
Working pressure	MPa	Refer to Fig. 1 below	Refer to Fig. 2 below
Back pressure	MPa	Refer to Fig. 1 below	Refer to Fig. 2 below
Operating pressure	MPa	NC/NO: 0.4 to 0.5 Double acting: 0.35 to 0.4	NC/NO: 0.5 to 0.6 Double acting: 0.4 to 0.45 (*2)

*1: Other specifications and dimensions are the same as standard. However, the fluid temperature is 5 to 90°C. For use with hydrofluoric acid, or when the fluid temperature exceeds 40°C, consult with CKD.
*2: NC for AMD5*2, AMG5*2, and GAMD5*2 0.5 to 0.6, NO: 0.45 to 0.5, Double acting: 0.35 to 0.4.

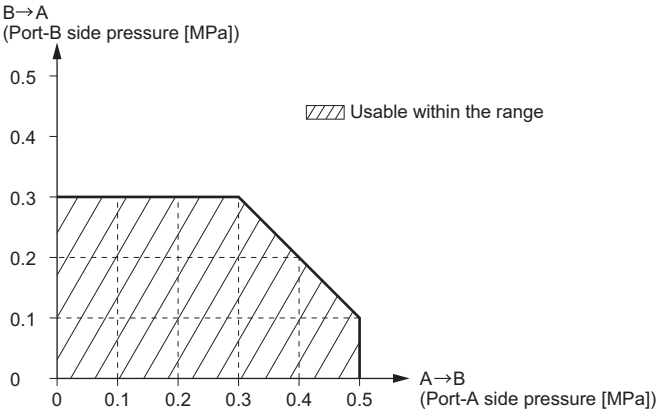

Fig 1: Usable fluid pressure range (B specification)

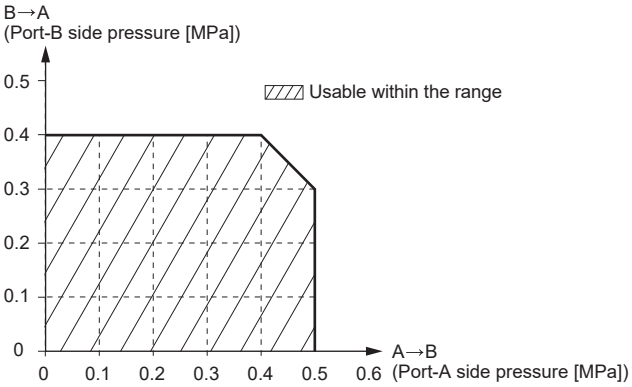

Fig 2: Usable fluid pressure range (Q specification)

How to order

AMD$^{3}_{4}{}_{5}$*2 Series

AMD$^{3}_{4}{}_{5}$ (1) 2 - (15BUS) - (0) (4) (P) (B)

❶ Actuation
❷ Connection
❸ Option
❹ Operating port direction
❺ Fluid

❻ High pressure specification	
B	0.3 MPa specification for both ports
Q	0.4 MPa specification for both ports

Precautions for model No. selection

*1: ❶ to❺ are the same as standard. Select from the page for each model. (AMD3*2, 4*2, 5*2: Page 24)
*2: When combining with operating port with reinforcing ring (R) and bottom mounting (X), fill in the model No. in the order of ③ ④ ⑤ R ⑥ X.
*3: If Item ❻ is Q, bypass cannot be specified.

AMD$^{3}_{4}{}_{5}$*2 Series (stainless steel body)

AMD$^{3}_{4}{}_{5}$ (1) 2 - (8) - (0) - (A) - (4) (B)

❶ Actuation
❷ Connection
❸ Option
❹ Actuator material
❺ Operating port direction

❻ High pressure specification	
B	0.3 MPa specification for both ports
Q	0.4 MPa specification for both ports

Precautions for model No. selection

*1: ❶ to ❺ are the same as standard stainless steel body. Select from the page for each model. However, if ❹ is blank, omit the previous hyphen when filling out the model No. (AMD3*2, 4*2, 5*2: Page 36)

Always read the precautions on Intro Pages 7 to 14 before use.

How to order

AMG$^{3}_{4}$02 Series

AMG$^{3}_{4}$02 - 15BUS - 1 - M L B

❶ Connection
❷ Option
❸ Fluid
❹ Port A position

❺ High pressure specification	
B	0.3 MPa specification for both ports
Q	0.4 MPa specification for both ports

Precautions for model No. selection

*1: ❶ to ❹ are the same as standard. Select from pages 48 to 55.
*2: When combining with operating port with reinforcing ring (R), fill in the model No. in the order of ③ ④ R ⑤.

GAMD$^{3}_{4}$*2 Series

GAMD$^{3}_{4}$ 1 2 - 15BUS - 1 - 2 M L B

❶ Actuation
❷ Connection
❸ Option
❹ Station No.
❺ Fluid
❻ Port A position

❼ High pressure specification	
B	0.3 MPa specification for both ports
Q	0.4 MPa specification for both ports

Precautions for model No. selection

*1: ❶ to ❻ are the same as standard. Select from pages 56 to 63.
*2: When combining with operating port with reinforcing ring (R), fill in the model No. in the order of ④ ⑤ ⑥ R ⑦.

Air operated valve for chemical liquids

AMDZ$^{1}_{2}_{3}$/AMD0$^{1}_{2}_{3}$ Series

●Connection tube size: ø3, ø6, ø6.35, 1/8", 1/4", (Rc1/8)

Specifications

Item		AMDZ *-* 2	AMDZ**4	AMD0**4
Working fluid		Chemical liquid, pure water, N_2 gas, air (*3)		
Fluid temperature	°C	5 to 80		
Proof pressure	MPa	1.0		
Working pressure (A→B)	MPa	0 to 0.5	0 to 0.3	0 to 0.5
Working pressure (B→A)	MPa	0 to 0.3		
Valve seat leakage	cm^3/min	0 (water pressure)		
Back pressure	MPa	0 to 0.3	0 to 0.1	0 to 0.3
Ambient temperature	°C	0 to 60		
Frequency		30 cycles/min. or less		
Mounting orientation		Unrestricted		
Connection		Rc1/8 O.D. ø3 tube connection O.D. 1/8" tube connection	O.D. ø6 tube connection O.D. 1/4" tube connection	Rc1/8 O.D. ø6 tube connection O.D. 1/4" tube connection
Orifice size		ø2	ø3.5	ø4
Cv value		0.08 (*1, 2)	0.25	0.32 (*2)
Operating section	Operating pressure MPa	NC/NO: 0.3 to 0.5,double acting: 0.2 to 0.3	NC/NO: 0.35 to 0.5,double acting: 0.2 to 0.3	NC/NO: 0.3 to 0.5,double acting: 0.2 to 0.3
	Operating port	M5		
Weight	kg	0.06	0.06	0.11

*1: The PFA body with Rc1/8 connection will have Cv = 0.12.
*2: The SUS body Cv will be about 80% of that of the PFA body with Rc1/8 connection.
*3: Cannot be used with acidic fluids. For use with acidic fluids, refer to pages 2 and 20. Check the compatibility of product structural materials, working fluids and atmosphere.
*4: Refer to page 70 for flow characteristics.

Internal structure and parts list

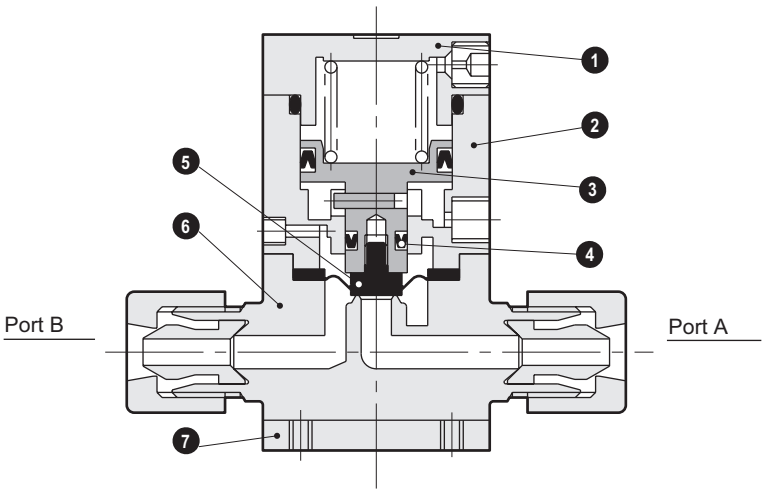

Part No.	Part name	Material (by body material) Standard	D
1	Cover	PPS	
2	Cylinder	PPS	
3	Piston rod	SUS303	
4	Y packing	NBR	
5	Diaphragm	PTFE	
6	Body	PFA, PTFE	SUS316
7	Mounting plate	SUS304	—

The material and structure may vary depending on the model number. Contact CKD for details.

⚠ Always read the precautions on Intro Pages 7 to 14 before use.

How to order

●AMDZ Series

AMDZ 1 - 6 - 2 - 1 D

- Model No.
- ❶ Actuation
- ❷ Connection
- ❸ Instruction on orifice size
- ❹ Option
- ❺ Body material

Code	Description	❷ Connection 6	3US	6BUS	3UP	6BUP	3UF	3UR	6BUR	6UR	8BUR
		Rc 1/8	Super Type Pillar fitting Integrated		Super 300 Pillar fitting P series integrated		F-LOCK 20 Series Integrated fitting	F-LOCK 60 Series Integrated fitting			
			ø3 × ø2 tube connection	1.8" × 086" tube connection	ø3 × ø2 tube connection	1.8" × 0.086" tube connection	ø3 × ø2 tube connection	ø3 × ø2 tube connection	1/8" × 1/16" tube connection	ø6 × ø4 tube connection	1/4" × 5/32" tube connection
❶ Actuation											
1	NC (normally closed)	●	●	●	●	●	●	●	●	●	●
2	NO (normally open)	●	●	●	●	●	●	●	●	●	●
3	Double acting	●	●	●	●	●	●	●	●	●	●
❸ Orifice size											
2	Refer to text at right	ø2						ø1.6			
4	Refer to text at right									ø3.5	
❹ Option											
Blank	ON/OFF only	●	●	●	●	●	●	●	●	●	●
1	With flow rate adjustment (NC only)	●	●	●	●	●	●	●	●	●	●
❺ Body material											
Blank	PFA molded body or PTFE machined body	PFA	PFA		PFA		PTFE	PTFE		PFA	
D	Stainless steel body	●									

* Machined PTFE products will be manufactured on a per-order basis.

●AMD0 Series

AMD0 1 - 8BUW - 4 - 1 D

- Model No.
- ❶ Actuation
- ❷ Connection
- ❸ Instruction on orifice size
- ❹ Option
- ❺ Body material

Code	Description	❷ Connection 6	6US	8BUS	6UP	8BUP	6UF	8BUF	6UR	8BUR	6UK	8BUK	8BUW
		Rc 1/8	Super Type Pillar fitting Integrated		Super 300 Pillar fitting P series integrated		F-LOCK 200 Series Integrated fitting		F-LOCK 60 Series Integrated fitting		Final Lock Fitting Integrated		Flaretek Fitting Integrated
			ø6 × ø4 tube connection	1/4" × 5/32" tube connection	ø6 × ø4 tube connection	1/4" × 5/32" tube connection	ø6 × ø4 tube connection	ø6.35 × ø4.3 tube connection	ø6 × ø4 tube connection	1/4" × 5/32" tube connection	ø6 × ø4 tube connection	1/4" × 5/32" tube connection	1/4" × 5/32" tube connection
❶ Actuation													
1	NC (normally closed)	●	●	●	●	●	●	●	●	●	●	●	●
2	NO (normally open)	●	●	●	●	●	●	●	●	●	●	●	●
3	Double acting	●	●	●	●	●	●	●	●	●	●	●	●
❸ Orifice size													
4	Refer to text at right	ø4							ø3.5		ø4		ø3
❹ Option													
Blank	ON/OFF only	●	●	●	●	●	●	●	●	●	●	●	●
1	With flow rate adjustment	●	●	●	●	●	●	●	●	●	●	●	●
❺ Body material													
Blank	PFA molded body or PTFE machined body	PFA	PFA		PFA		PFA		PFA		PFA		PTFE
D	Stainless steel body	●											

* Machined PTFE products will be manufactured on a per-order basis.

Precautions for model No. selection

*1: Refer to pages 2 and 20 if selecting all-resin for an actuator that can be used for acidic fluids.
*2: The low-sliding (diaphragm) actuator is also supported to reduce foaming and improve liquid drainage performance. Contact CKD for details.

Dimensions

●Rc thread

・AMDZ*6-2

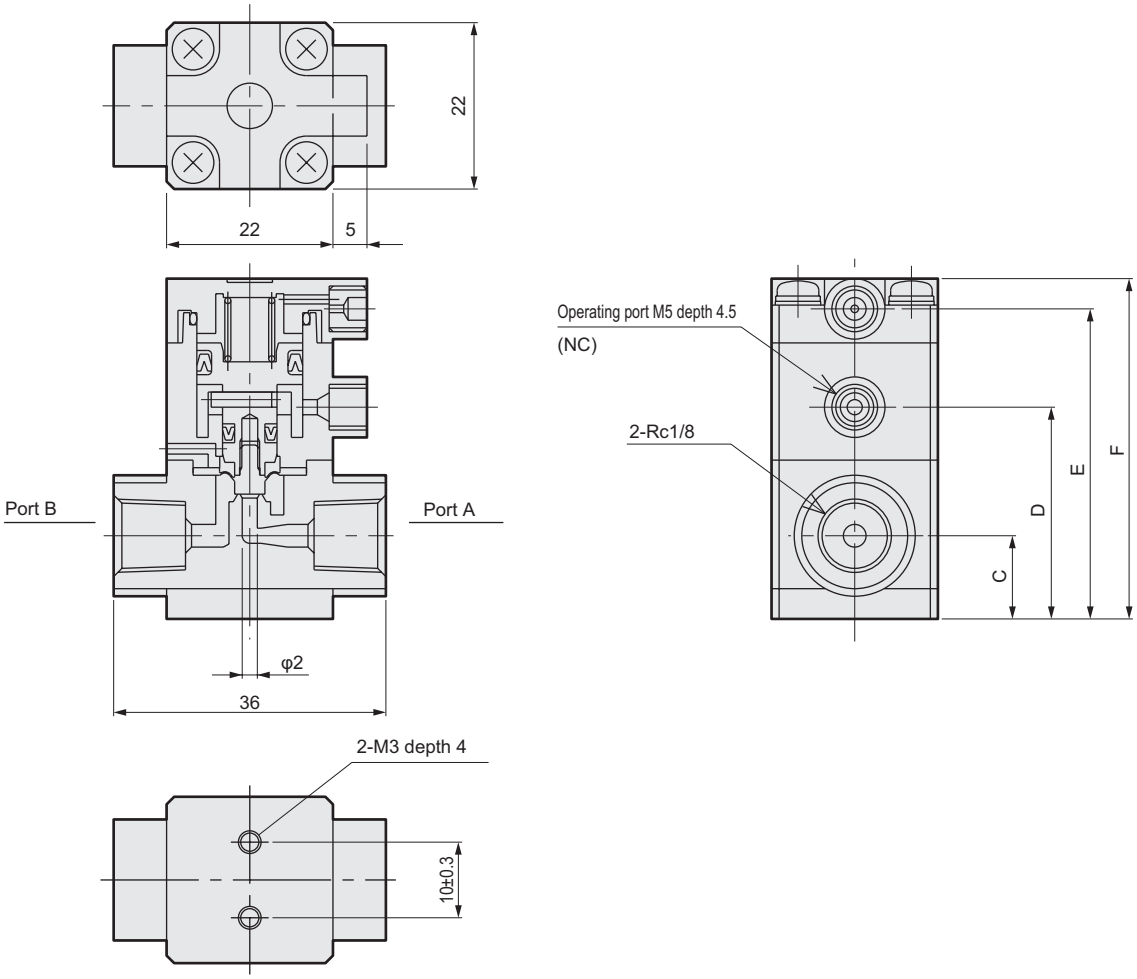

●Integrated fitting

・AMDZ*- *1 -2

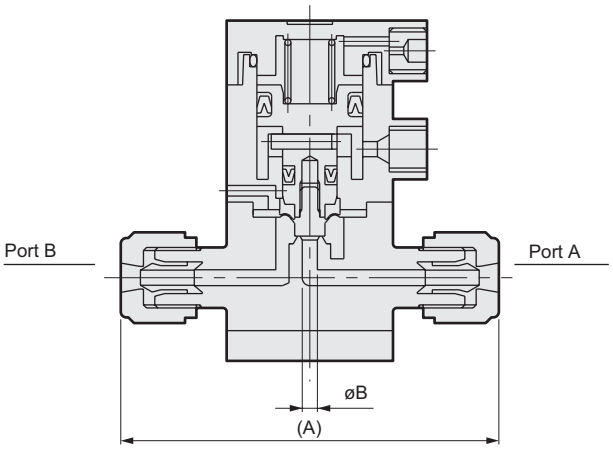

●With flow rate adjustment

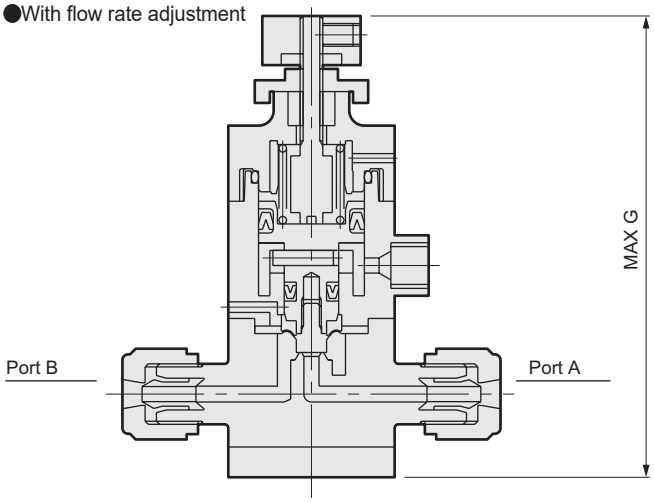

Dimensions *1 (Connector No.)	A	B	C	D	E	F	MAX G
6	-	2	11	28	41	45	63
3US, 3UP	50	2	11	28	41	45	63
6BUS, 6BUP	50	2	11	28	41	45	63
3UF	40	2	11	28	41	45	63
3UR	57	1.6	11	28	41	45	63
6BUR	57	1.6	11	28	41	45	63
6UR	82	3.5	12	31	44	48	66
8BUR	84	3.5	12	31	44	48	66

Dimensions

●Rc thread

・AMD0*6-4

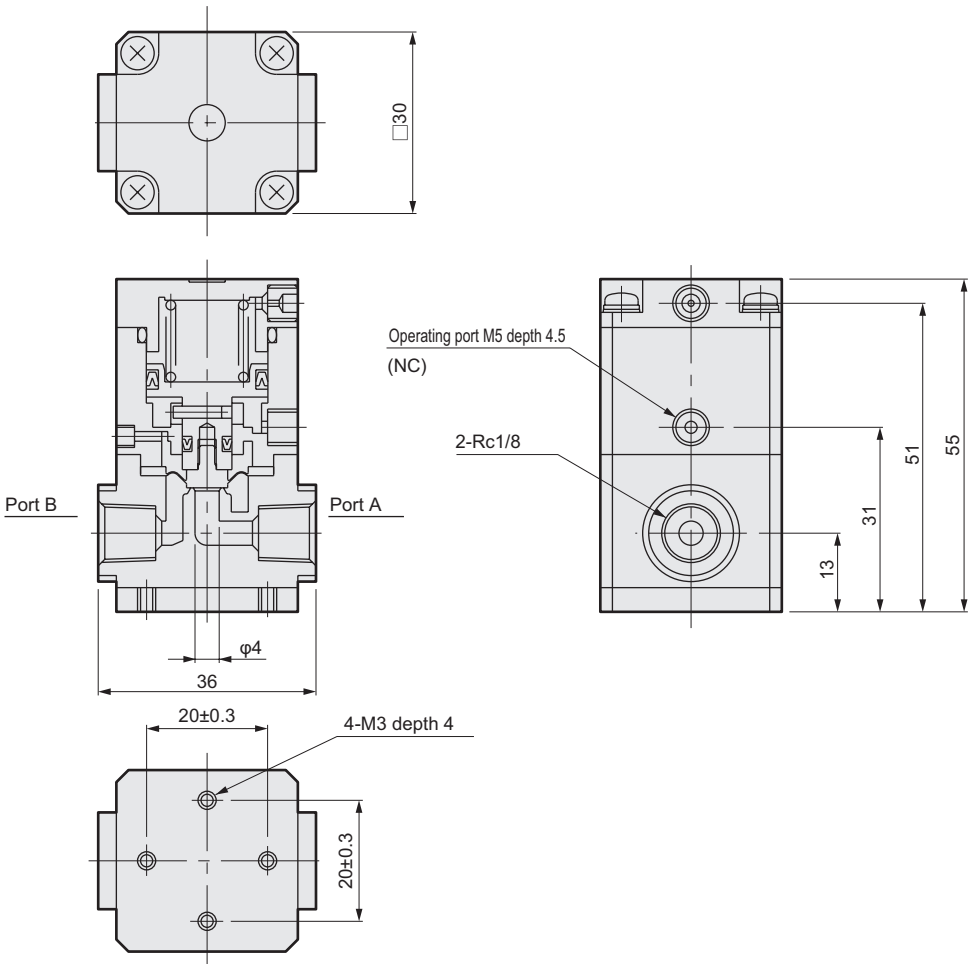

●Integrated fitting

・AMD0*- *1 -4

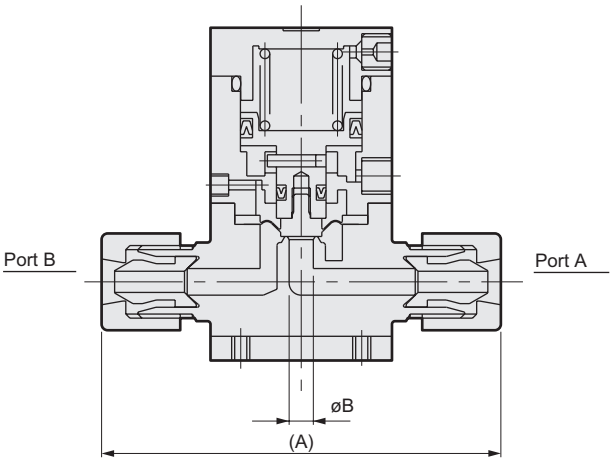

●With flow rate adjustment

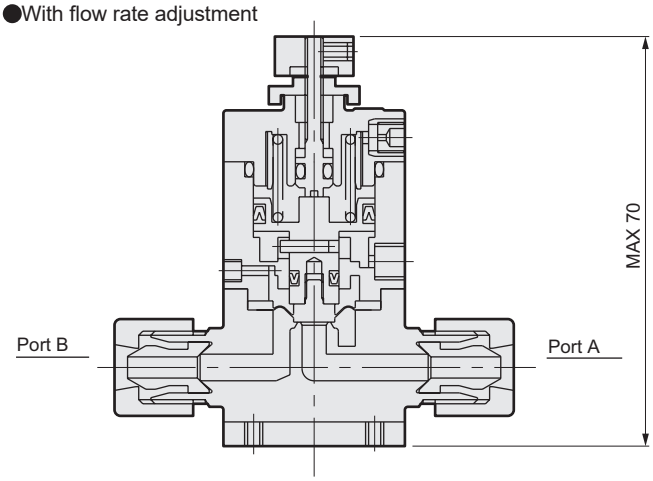

Dimensions *1 (Connector No.)	A	B
6US	66	4
8BUS	66	4
6UP	68	4
8BUP	68	4

Dimensions *1 (Connector No.)	A	B
6UF	64	4
8BUF	64	4
6UR	90	3.5
8BUR	92	3.5
6UK	71	4
8BUK	71	4
8BUW	86	3

Flow characteristics

AMDZ / AMD0

● Flow characteristics (water)
Differential pressure - internal flow rate ( ): Cv

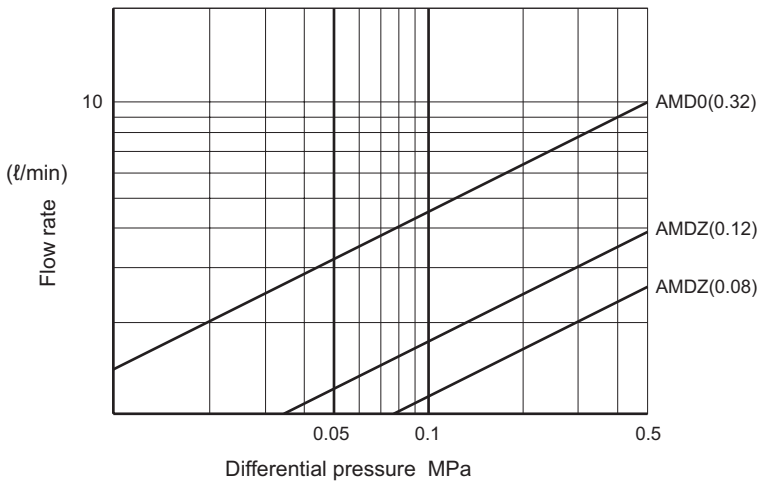

● With flow rate adjustment (water)
Rotations - flow rate

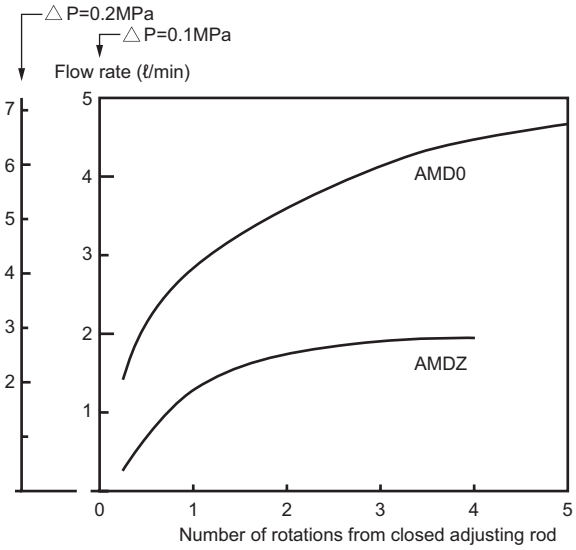

*1: Vibration and flow rate fluctuation may occur depending on the working conditions such as fluid temperature, differential pressure, and opening. Confirm that the product is acceptable under actual working conditions before use. For precise flow rate adjustment, select the FMD Series or Fine flow rate adjusting valve (LYX).

MEMO

Air operated valve for chemical liquids (3-port valve)

AMGZ0 / AMG00 Series

●Connection tube size: ø3, ø6, ø6.35, 1/8", 1/4"

RoHS

Specifications

Item		AMGZ0-*-2	AMG00-*-4
Working fluid		Chemical liquid, pure water, N_2 gas, air (*1)	
Fluid temperature °C		5 to 80	
Proof pressure MPa		1.0	
Working pressure (A→B)MPa		0 to 0.5	
Working pressure (B→A)MPa		0 to 0.3	
Valve seat leakage cm^3/min		0 (water pressure)	
Back pressure MPa		0 to 0.3	
Ambient temperature°C		0 to 60	
Frequency		30 cycles/min. or less	
Mounting orientation		Unrestricted	
Connection		O.D. ø3 tube connection O.D. 1/8" tube connection	O.D. ø6 tube connection O.D. ø6.35 tube connection O.D. 1/4" tube connection
Orifice size		ø2	ø4
Cv value		0.08	0.32
Operating section	Operating pressure MPa	0.3 to 0.5	
	Operating port	M5	
Weight kg		0.12	0.21

*1: Cannot be used with acidic fluids. Check the compatibility of product structural materials, working fluids and atmosphere.

Internal structure and parts list

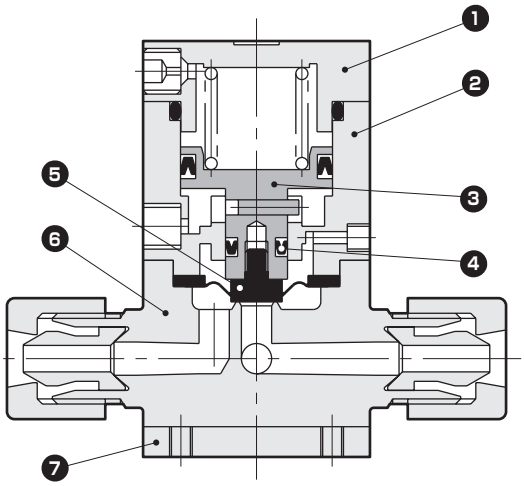

Part No.	Part name	Material
1	Cover	PPS
2	Cylinder	PPS
3	Piston rod	SUS303
4	Y packing	NBR
5	Diaphragm	PTFE
6	Body	PFA, PTFE
7	Mounting plate	SUS304

The material and structure may vary depending on the model number. Contact CKD for details.

⚠ Always read the precautions on Intro Pages 7 to 14 before use.

How to order

●AMGZ0 Series

AMGZ0 - 3UF - 2

- AMGZ0: Model No.
- 3UF: ❶ Connection
- 2: Orifice diameter

❶ Connection							
3US	6BUS	3UP	6BUP	3UF		3UR	6BUR
Super Type Pillar fitting Integrated		Super 300 Pillar fitting P series integrated		F-LOCK 200 Series Integrated fitting		F-LOCK 60 Series Integrated fitting	
ø3 x ø2 tube connection	1.8" x 0.086" tube connection	ø3 x ø2 tube connection	1.8" x 0.086" tube connection	ø3 x ø2 tube connection		ø3 x ø2 tube connection	1/8" ×1/16" tube connection
Orifice size							
Refer to text at right	ø2					ø1.6	
Body material							
PFA molded body or PTFE machined body	PFA		PFA	PTFE		PTFE	

* Machined PTFE products will be manufactured on a per-order basis.

●AMG00 Series

AMG00 - 8BUF - 4

- AMG00: Model No.
- 8BUF: ❶ Connection
- 4: Orifice diameter

❶ Connection										
6US	8BUS	6UP	8BUP	6UF	8BUF	6UR	8BUR	6UK	8BUK	8BUW
Super Type Pillar fitting Integrated		Super 300 Pillar fitting P series integrated		F-LOCK 200 Series Integrated fitting		F-LOCK 60 Series Integrated fitting		Final Lock Fitting Integrated		Flaretek Fitting Integrated
ø6 x ø4 tube connection	1/4" × 5/32" tube connection	ø6 x ø4 tube connection	1/4" × 5/32" tube connection	ø6 x ø4 tube connection	ø6.35 × ø4.3 tube connection	ø6 x ø4 tube connection	1/4" × 5/32" tube connection	ø6 x ø4 tube connection	1/4" × 5/32" tube connection	1/4" × 5/32" tube connection
Orifice size										
Refer to text at right	ø4					ø3.5		ø4		ø3
Body material										
PFA molded body or PTFE machined body	PFA		PTFE		PTFE		PTFE		PTFE	PTFE

* Machined PTFE products will be manufactured on a per-order basis.

Dimensions

●Integrated fitting

・AMGZ0- [*1] -2

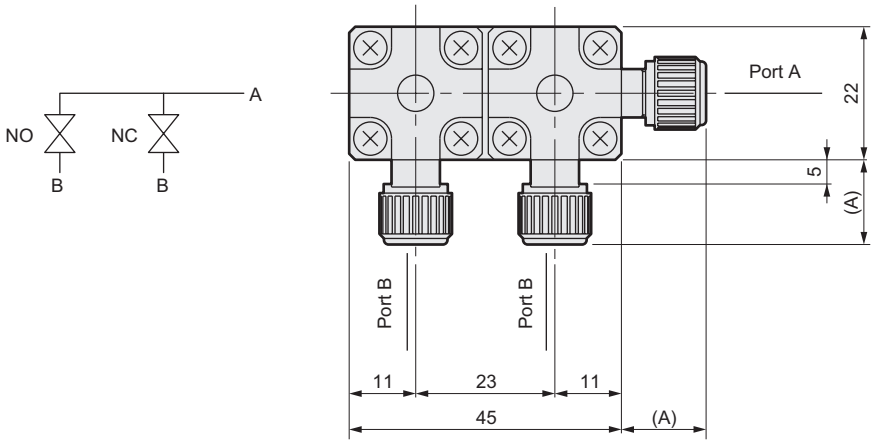

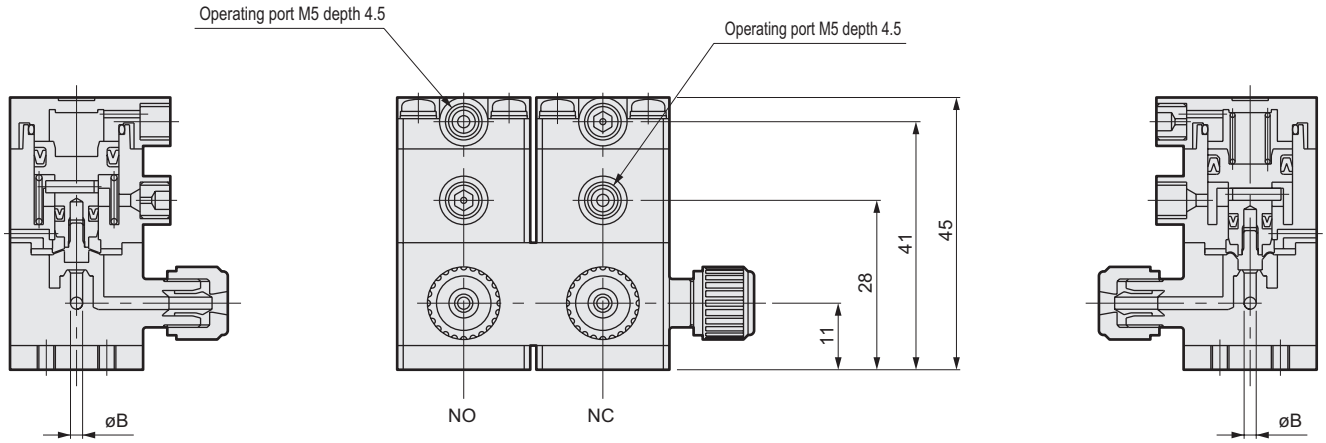

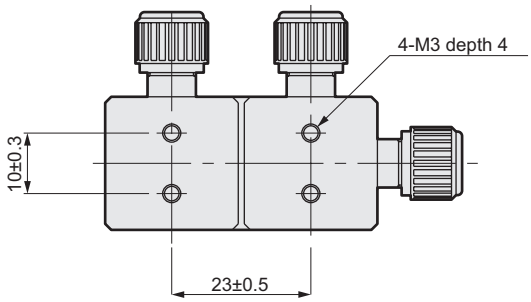

Dimensions [*1] (Connector No.)	A	B
3US, 3UP	14	2
6BUS, 6BUP	14	2
3UF	9	2
3UR	17.5	1.6
6BUR	17.5	1.6

Dimensions

●Integrated fitting

・AMG00- *1 -4

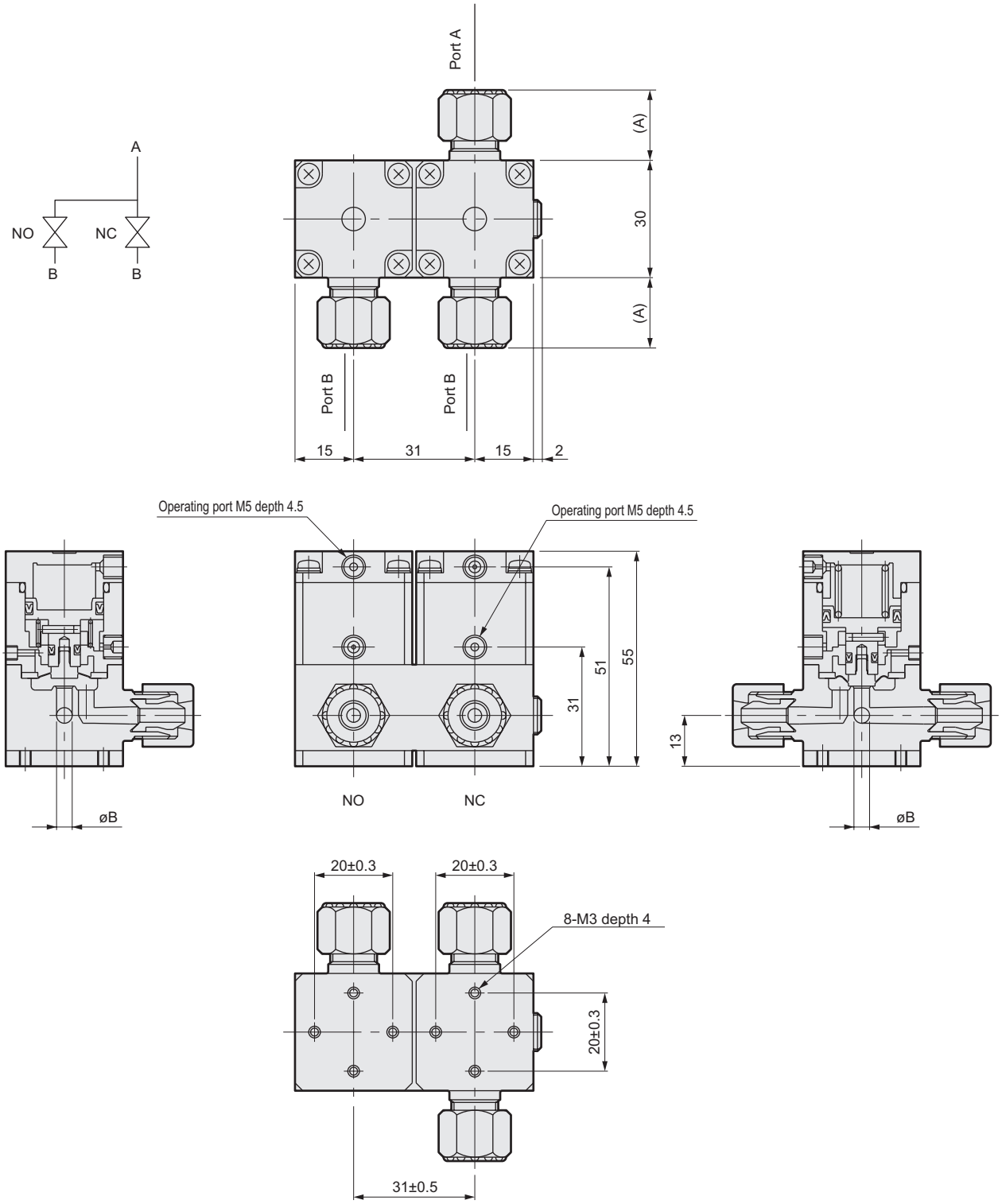

Dimensions *1 (Connector No.)	A	B
6US	18	4
8BUS	18	4
6UP	19	4
8BUP	19	4

Dimensions *1 (Connector No.)	A	B
6UF	17	4
8BUF	17	4
6UR	30	3.5
8BUR	31	3.5
6UK	20.5	4
8BUK	20.5	4
8BUW	28	3

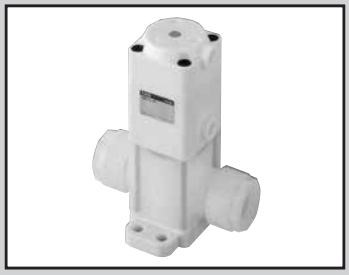

Air operated valve for high pressure chemical liquid

AMD*1H Series

A valve designed to support high pressure and high back pressure in chemical liquid lines in semiconductor manufacturing lines.

- Connection tube size: 1/2", 3/4", 1", 1.25"
  PFA pipe for welding:
  Nominal 1/4", 1/2", 3/4", 1" RoHS CAD

Export controlled items

*Eligibility: AMD41H, 51H, 61H (*5)

Variation contents

- Water hammer reduction (L)
- Operating pressure reduction (V)
- Operating pressure reduction + water hammer reduction (VL)

Model No.		Working press (MPa)	Operating press (MPa)	Water hammer Reduction
AMD*1H - * -	Blank	0 to 0.7	0.5 to 0.7	
AMD*1H - * -	L	0 to 0.7	0.5 to 0.7	WH Reduction
AMD*1H - * -	V	0 to 0.5	0.4 to 0.6	
AMD*1H - * -	VL	0 to 0.5	0.4 to 0.6	WH Reduction

Specifications

Item		AMD41H		AMD51H	AMD61H
Actuation		NC (normally closed)			
Working fluid		Chemical liquids, pure water, air, N_2 gas (*1)			
Fluid temperature °C		5 to 40			
Proof pressure MPa		1.4			
Working pressure (A→B) MPa		0 to 0.7			
Valve seat leakage cm^3/min		0 (water pressure)			
Back pressure MPa		0 to 0.7			
Ambient temperature °C		0 to 40			
Frequency		15 cycle/min. or less			
Mounting orientation		Unrestricted			
Connection		O.D. 1/2" tube connection Nominal 1/4" PFA pipe for welding	OD3/4" tube connection Nominal 1/2" PFA pipe for welding	O.D. 1" tube connection Nominal 3/4" PFA pipe for welding	OD1.25" tube connection Nominal 1" PFA pipe for welding
Orifice size		ø10	ø16	ø22	ø25
Cv value		2	5 (*2)	9.5	14
Operating section	Operating pressure MPa	0.5 to 0.7			
	Operating port	Rc1/8			
Weight kg		0.56		1.1	1.3

Optional specifications(: Additional specifications)

Item		AMD*1H-*-L	AMD*1H-*-V	AMD*1H-*-VL
Actuation		NC (normally closed)		
Working fluid		Chemical liquids, pure water, air, N_2 gas (*1)		
Fluid temperature °C		5 to 40		
Proof pressure MPa		1.4		
Working pressure (A→B) MPa		0 to 0.7	0 to 0.5	0 to 0.5
Back pressure MPa		0 to 0.7	0 to 0.5	0 to 0.5
Ambient temperature °C		0 to 40		
Frequency		5 cycle/min. or less	15 cycle/min. or less	5 cycle/min. or less
Mounting orientation		Unrestricted		
Operating section	Operating pressure MPa	0.5 to 0.7	0.4 to 0.6	0.4 to 0.6
	Operating port	Rc1/8		
Water hammer reduction		●(*4)	—	●(*4)

*1: Check the compatibility of product structural materials, working fluids and atmosphere.
*2: The Flaretek fitting has a Cv of 4.5.
*3: Refer to page 80 for flow characteristics.
*4: The water hammer reduction type has a longer response time than standard. Contact CKD for details.
*5: Excludes O.D. 1/2" tube connection and nominal 1/4" PFA pipe.

⚠ Always read the precautions on Intro Pages 7 to 14 before use.

Internal structure and parts list

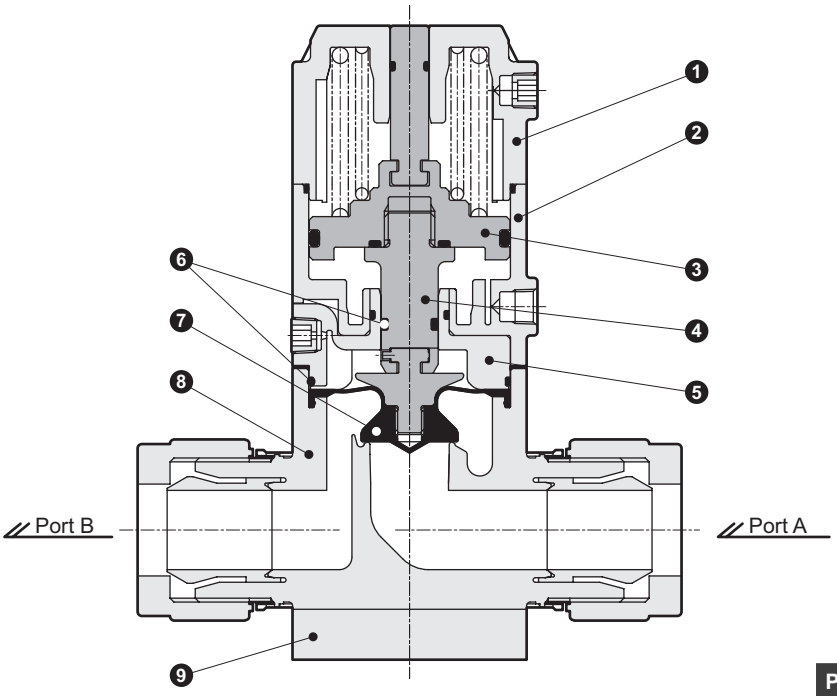

Part No.	Part name	Material (by fluid code)	
		Standard	M
1	Cover	PP	
2	Cylinder	PP	
3	Piston	PP	
4	Rod	PP	
5	Diaphragm holder	PP	
6	O-ring	FKM	EPDM
7	Diaphragm	PTFE	
8	Body	PFA	
9	Mounting plate	PP	

The material and structure may vary depending on the model number. Contact CKD for details.

How to order

●AMD*1H Series

AMD41H - 4BJ - V L M
AMD51H
AMD61H

Model No.
❶ Connection
❷ Operating pressure
❸ Option
❹ Fluid

	AMD41H						AMD51H			AMD61H	
❶ Connection											
	4BJ	6BJ	4BW	6BW	2W	4W	8BJ	8BW	6W	10BJ	8W
	Super 300 Pillar fitting P series integrated		Flaretek Fitting Integrated		For welding PFA pipe		Super 300 Pillar fitting P series integrated	Flaretek Fitting Integrated	For welding PFA pipe	Super 300 Pillar fitting P series integrated	For welding PFA pipe
	1/2" x 3/8" tube connection	3/4" x 5/8" tube connection	1/2" x 3/8" tube connection	3/4" x 5/8" tube connection	Nominal 1/4" PFA pipe for welding	Nominal 1/2" PFA pipe for welding	1" x 7/8" tube connection	1" x 7/8" tube connection	Nominal 3/4" PFA pipe for welding	1 1/10" x 1 1/4" tube connection	Nominal 1" PFA pipe for welding
Code / Description — Orifice size	ø10	ø16	ø10	ø16	ø10	ø16	ø22			ø25	
Cv	2	5	2	4.5	2	5	9.5			14	
Body material	PFA molded body										
❷ Operating pressure											
Blank Standard (0.5 to 0.7 MPa)	●	●	●	●	●	●	●	●	●	●	●
V 0.4 to 0.6 MPa	●	●	●	●	●	●	●	●	●	●	●
❸ Option											
Blank Standard	●	●	●	●	●	●	●	●	●	●	●
L Water hammer reduction	●	●	●	●	●	●	●	●	●	●	●
❹ Fluid											
Blank Standard	●	●	●	●	●	●	●	●	●	●	●
M For ammonia (*1)	●	●	●	●	●	●	●	●	●	●	●

*1: Available as made to order.

⚠ CAUTION

Water Hammer

The option "L" water hammer reduction structure reduces water hammer, but sufficient reduction may not be obtained depending on the piping conditions. Be sure to check with a trial run whether water hammer reduction is obtained after construction. If the reduction is not obtained, review the piping conditions. In general, the shorter and straighter the valve secondary side piping, the greater the reduction performance.

Dimensions

●Integrated fitting

• AMD$^{4}_{5}$$_{6}$ 1H-* BJ
* BW

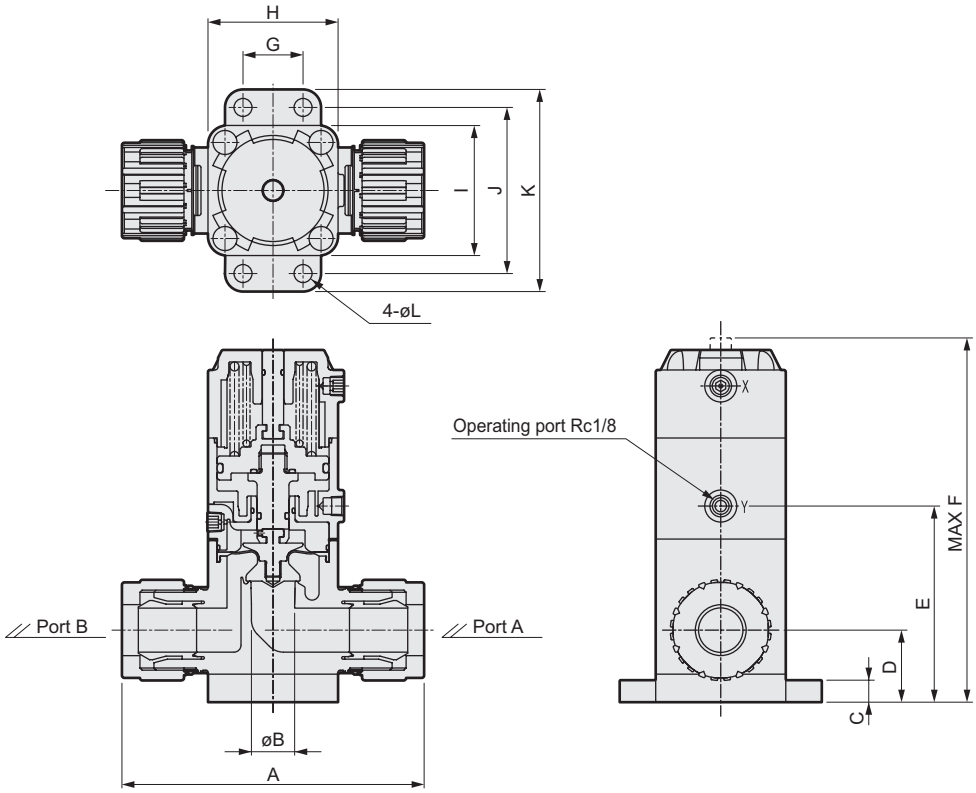

●Pipe for welding

• AMD$^{4}_{5}$$_{6}$ 1H-* W

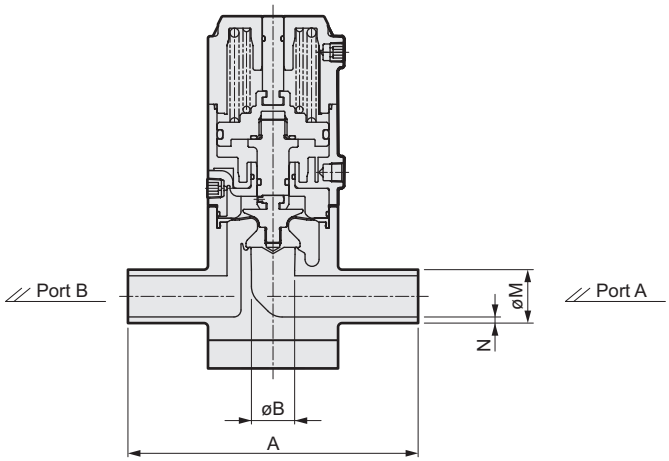

Model No.	Connector No.	A	B	C	D	E	F	G	H	I	J	K	L	M	N
AMD41H	4BJ	108	10	10	31	80	147	20	50	50	68	86	9	-	-
	4BW	117	10	10	31	80	147	20	50	50	68	86	9	-	-
	2W	110	10	10	31	80	147	20	50	50	68	86	9	13.7	2.3
	6BJ	122	16	10	31	80	147	20	50	50	68	86	9	-	-
	6BW	126	16	10	31	80	147	20	50	50	68	86	9	-	-
	4W	130	16	10	31	80	147	20	50	50	68	86	9	21.3	2.8
AMD51H	8BJ	151	22	11	36	98	182	30	65	65	83	101	9	-	-
	8BW	161	22	11	36	98	182	30	65	65	83	101	9	-	-
	6W	145	22	11	36	98	182	30	65	65	83	101	9	26.7	2.9
AMD61H	10BJ	198	25	12	42	111	202	38	75	75	93	111	9	-	-
	8W	155	25	12	42	111	202	38	75	75	93	111	9	33.4	3.4

Flow characteristics

● Flow characteristics (water)
Differential pressure - internal flow rate ( ): Cv

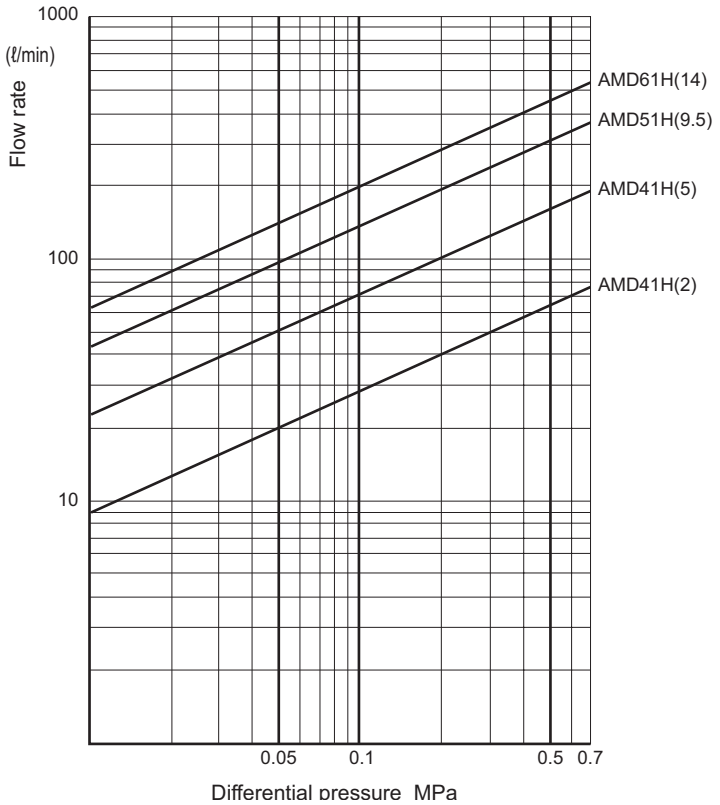

MEMO

Air operated valve for chemical liquids, metal-free

AMD*1M Series

A valve designed to support strong acid (hydrochloric acid, hydrofluoric acid) lines in semiconductor manufacturing.

● Connection tube size: ø10, ø12, ø25, 3/8″, 1/2″, 3/4″, 1"

RoHS CAD

Export controlled items

*Eligibility: AMD51M

Specifications

Item		AMD31M		AMD51M	
Actuation		NC (normally closed)			
Working fluid		Chemical liquids, pure water, air, N_2 gas (*1)			
Fluid temperature °C		5 to 40			
Proof pressure MPa		1.0			
Working pressure (A→B) MPa		0 to 0.5			
Valve seat leakage cm^3/min		0 (water pressure)			
Back pressure MPa		0 to 0.5			
Ambient temperature °C		0 to 40			
Frequency		20 cycle/min. or less		15 cycle/min. or less	
Mounting orientation		Unrestricted			
Connection		O.D. ø3/8" tube connection O.D. ø10 tube connection	O.D. ø1/2" tube connection O.D. ø12 tube connection	O.D. ø3/4" tube connection	O.D. 1" tube connection O.D. ø25 tube connection
Orifice size		Ø 8	ø10	ø16	ø22
Cv value		1.25	1.8	5.5	9.5
Operating section	Operating pressure MPa	0.4 to 0.6			
	Operating port	Rc1/8			
Weight kg		0.33		1.0	

*1: Check the compatibility of product structural materials, working fluids and atmosphere.

⚠ Always read the precautions on Intro Pages 7 to 14 before use.

Internal structure and parts list

AMD31M

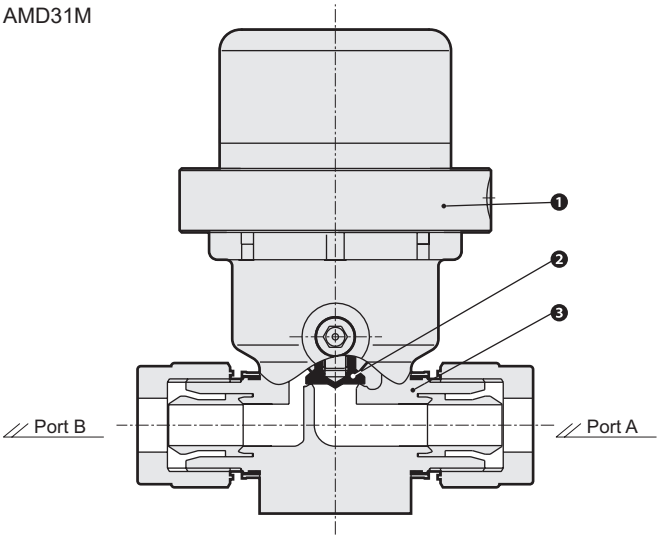

Part No.	Part name	Material
1	Actuator	PP, etc.
2	Diaphragm	PTFE
3	Body	PFA

AMD51M

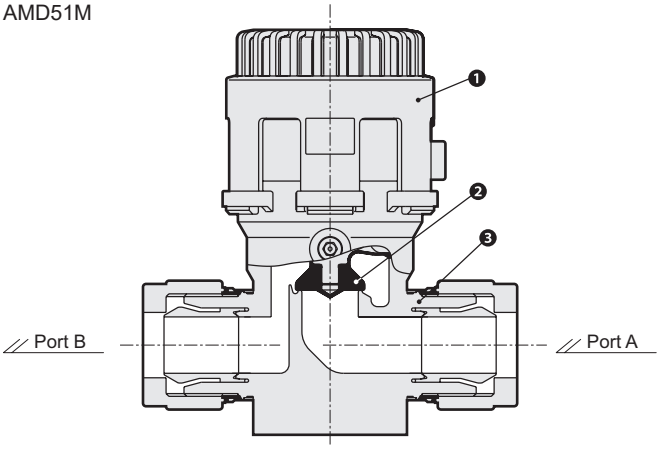

Part No.	Part name	Material
1	Actuator	PVDF and others
2	Diaphragm	PTFE
3	Body	PFA

How to order

●AMD*1M Series

AMD31M - **3BJ**

AMD51M

Model No.

❶Connection

	AMD31M				AMD51M		
❶ Connection	3BJ	10J	4BJ	12J	6BJ	8BJ	25J
	Super 300 Pillar fitting P series integrated						
	3/8" x 1/4" tube connection	ø10 x ø8 tube connection	1/2" x 3/8" tube connection	ø12 x ø10 tube connection	3/4" x 5/8" tube connection	1" x 7/8" tube connection	ø25 × ø22 tube connection
Orifice size / Description	ø8		ø10		ø16	ø22	
Cv	1.25		1.8		5.5	9.5	

Dimensions

●AMD31M-* 1

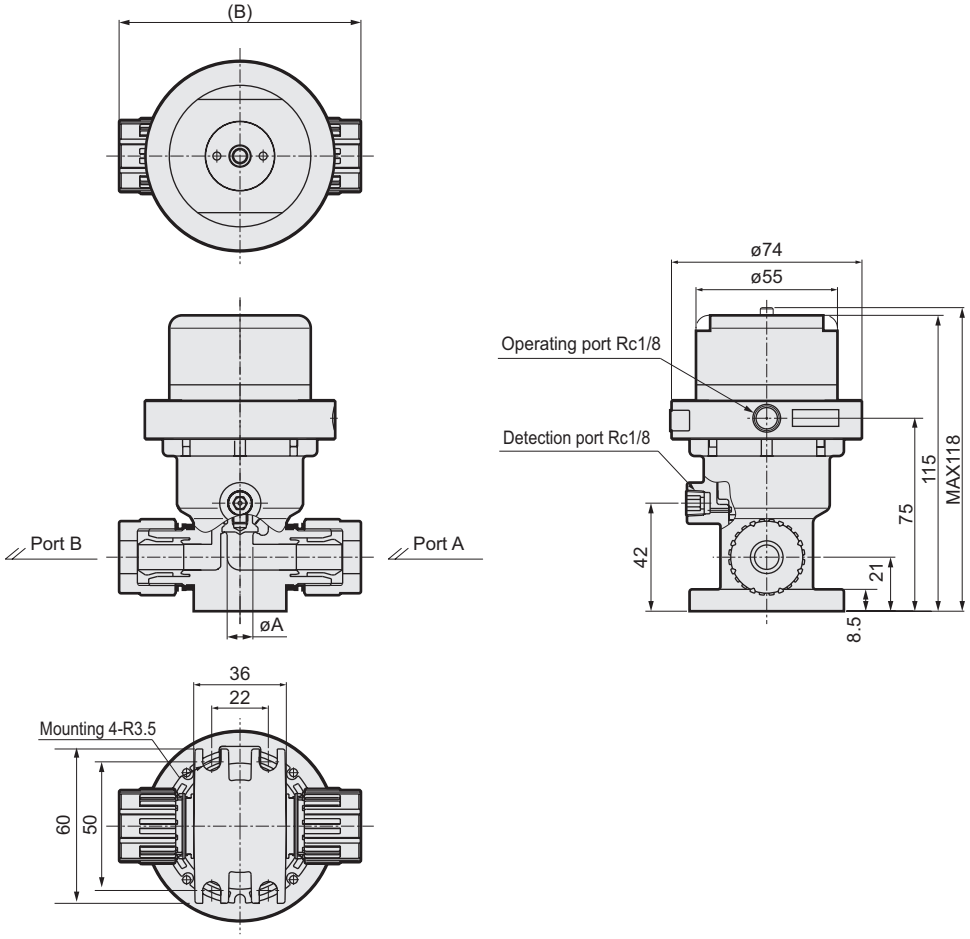

*1 (connector No.)	øA	B
3BJ	8	86
4BJ	10	94

Dimensions

●AMD51M- * 1

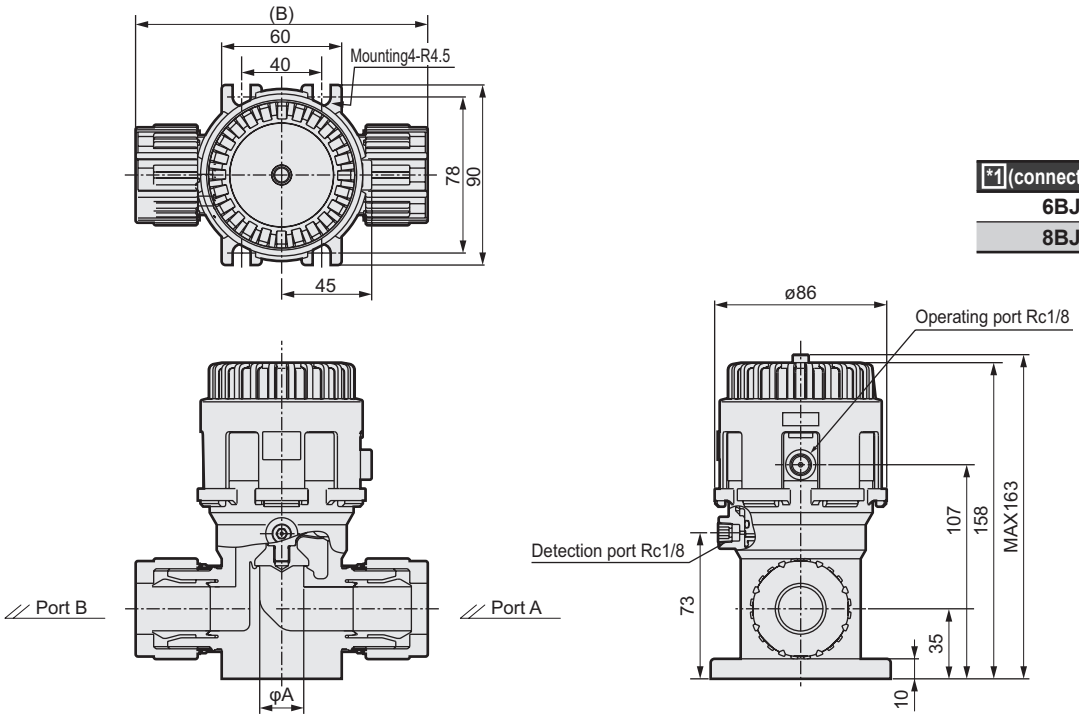

*1 (connector No.)	øA	B
6BJ	16	132
8BJ	22	146

Flow characteristics

● Flow characteristics (water)
Differential pressure - internal flow rate ( ): Cv

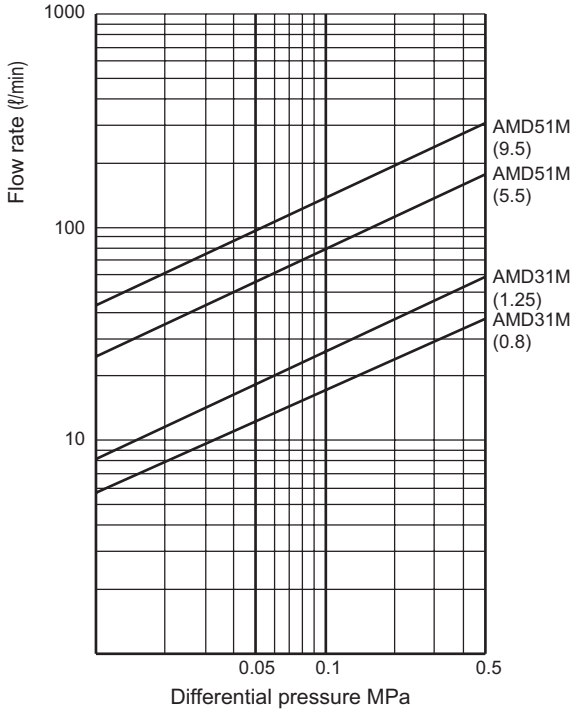

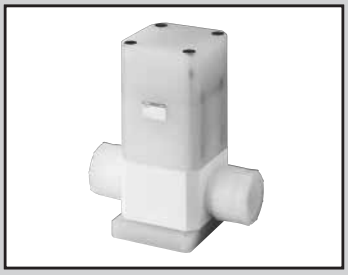

Air operated valve for large bore size chemical liquids

LYX Series

Large bore size PFA tube 1.5" compatible

RoHS

Export controlled items

Specifications

Item		LYX-1380
Working fluid		Chemical liquids, pure water, air, N_2 gas (*1)
Fluid temperature	°C	10 to 35
Proof pressure	MPa	0.8
Working pressure (A→B)	MPa	0 to 0.4
Working pressure (B→A)	MPa	0 to 0.4
Valve seat leakage	cm^3/min	0 (water pressure)
Back pressure	MPa	0 to 0.4
Ambient temperature	°C	5 to 35
Frequency		4 cycle/min. or less
Mounting orientation		Horizontal direction with the actuator on top or vertical direction
Connection		OD1 1/2" Super 300 Pillar fitting P Series $1^1/_2$"×$1^{21}/_{64}$" tube connection
Orifice size		ø40
Cv value		24
Operating section	Operating pressure MPa	0.5 to 0.6
	Operating port	Rc1/8
Weight	kg	6.1

*1: Check the compatibility of product structural materials, working fluids and atmosphere.

How to order

LYX - 1380 - 12BJ - M

Model No.

❶ Working Fluid

Code	Description
❶ Fluid	
Blank	Standard
M	For ammonia

Internal structure and parts list

●LYX-1380

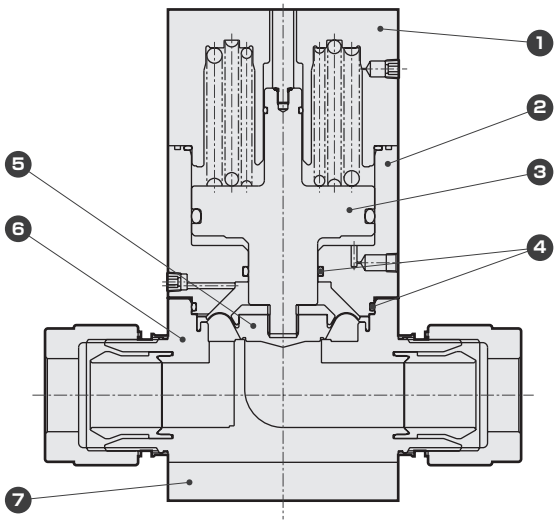

Part No.	Part name	Material (by fluid code)	
		Standard	M
1	Cover	PP	
2	Cylinder	PP	
3	Piston rod	PP	
4	O-ring	FKM	EPDM
5	Diaphragm	PTFE	
6	Body	PTFE	
7	Mounting plate	PP	

The material and structure may vary depending on the model number. Contact CKD for details.

⚠ Always read the precautions on Intro Pages 7 to 14 before use.

Dimensions

● Air operated valve

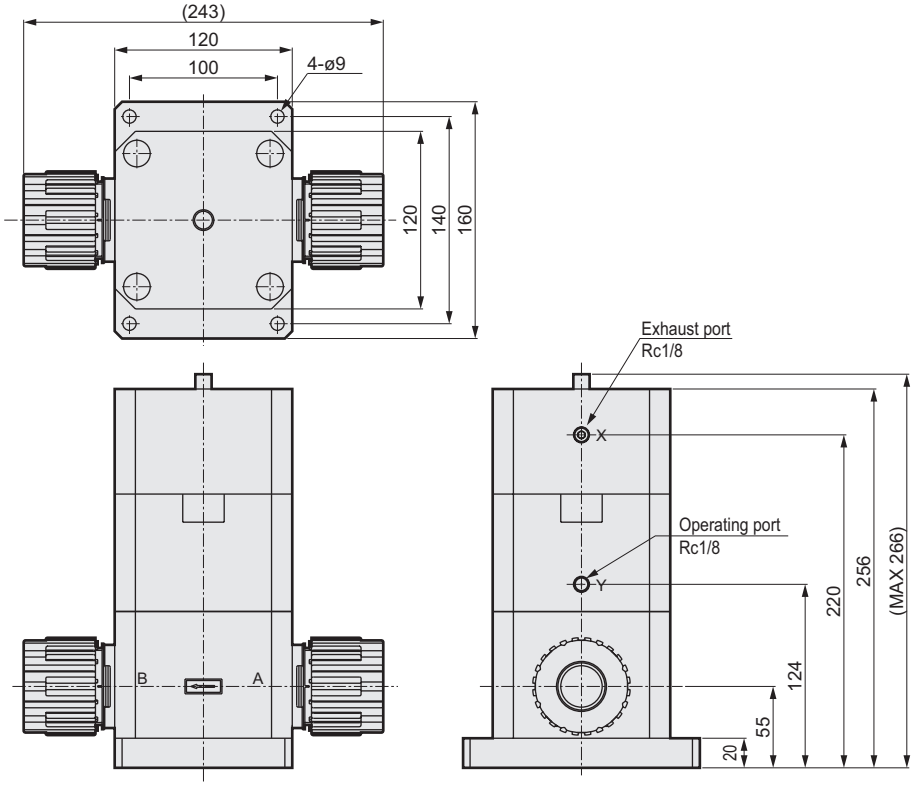

Air operated valve for pure water (PVC)

AMD*1L Series

- NC (normally closed)
- Connection PVC union fitting, Nominal 16 to 50

RoHS

Specifications

Item	AMD41L-15AU	AMD41L-20AU	AMD51L-25AU	AMD61L-32AU	AMD71L-40AU	AMD81L-50AU
Actuation category	NC (normally closed) (*1)					
Working fluid	Pure water/Air/N_2 gas (*2)					
Fluid temperature °C	5 to 40					5 to 45
Proof pressure MPa	0.8					
Working pressure range (IN→OUT) MPa	0 to 0.4					
Valve seat leakage cm^3/min	0 (water pressure)					
Back pressure MPa	0 to 0.2					
Ambient temperature °C	0 to 40					
Frequency	10 cycles/min. or less			6 cycles/min. or less		
Mounting orientation	Unrestricted					
Connection	PVC union fitting integrated					
Orifice	ø18	ø18	ø23	ø30	ø36	ø50
Bypass orifice (with bypass)	ø6					
Cv (*3)	7 (6.4)	7 (6.4)	10 (10)	17 (17)	24 (24)	50
Operating section: Operating pressure range MPa	NC 0.4 to 0.5 (*1)					
Operating section: Operating pressure connection port	Rc1/8					
Weight kg	0.56	0.56	0.89	1.7	2.8	5.4

*1 : Also compatible with NO. Contact CKD for details. (excluding AMD81L)
*2 : Refer to the precautions at the end for details.
*3 : Values in ( ) are with flow rate adjustment.

Internal structure and parts list

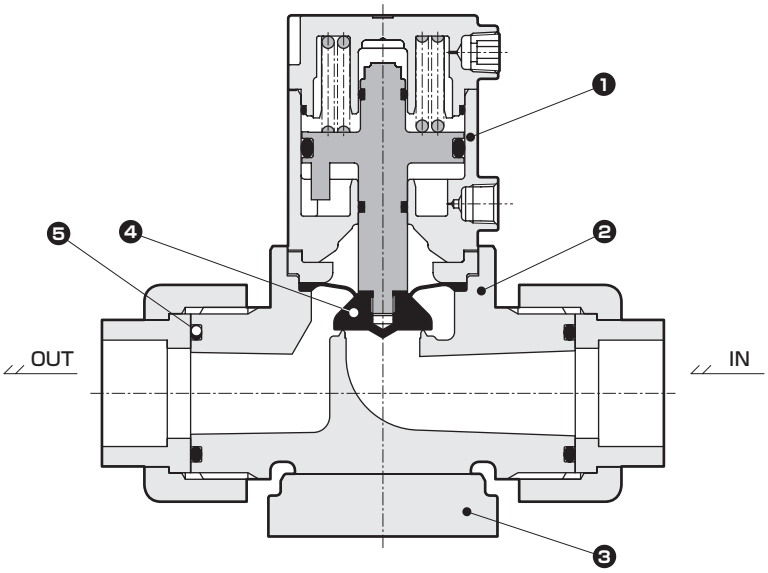

Part No.	Part name	Material	Quantity
1	Actuator assembly	PPS, etc.	1
2	Body	PVC	1
3	Mounting plate	PPS	1
4	Diaphragm	PTFE	1
5	O-ring	FKM (EPDM)	2

⚠ Always read the precautions on Intro Pages 7 to 14 before use.

How to order

AMD41L - 15AU - 0 I - 4 R

- ❺ Reinforcing ring
- ❹ Operating port direction
- ❸ O-ring material
- ❷ Option
- Model No.
- ❶ Connection

	AMD41L		AMD51L	AMD61L	AMD71L	AMD81L
❶ Connection						
15AU	**20AU**		**25AU**	**32AU**	**40AU**	**50AU**
PVC union fitting integrated						
Nominal 16	Nominal 20		Nominal 25	Nominal 30	Nominal 40	Nominal 50

Code	Description \ Orifice size	ø18		ø23	ø30	ø36	ø50
❷ Option							
0	ON/OFF only	●	●	●	●	●	●
1	With flow rate adjustment	●	●	●	●	●	●
2	With bypass	●	●	●	●	●	●
3	With flow rate adjustment/bypass	●	●	●	●	●	●
❸ O-ring material							
I	FKM	●	●	●	●	●	●
A	EPDM	●	●	●	●	●	●
❹ Operating port direction							
4	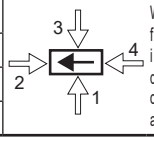 With valve viewed from above, indicates fluid flow direction and operating port direction are listed below.	●	●	●	●	●	●
1		●	●	●	●	●	●
2		●	●	●	●	●	●
3		●	●	●	●	●	●
❺ Reinforcing ring							
Blank	None	●	●	●	●	●	
R	Yes	●	●	●	●	●	

⚠ Precautions for model No. selection

*1 : With indicator is available. Contact CKD for details. (excluding AMD81L)
*2 : R with reinforcing ring cannot be selected for AMD81L Series.

Dimensions (AMD41L to AMD71L)

●PVC union fitting integrated

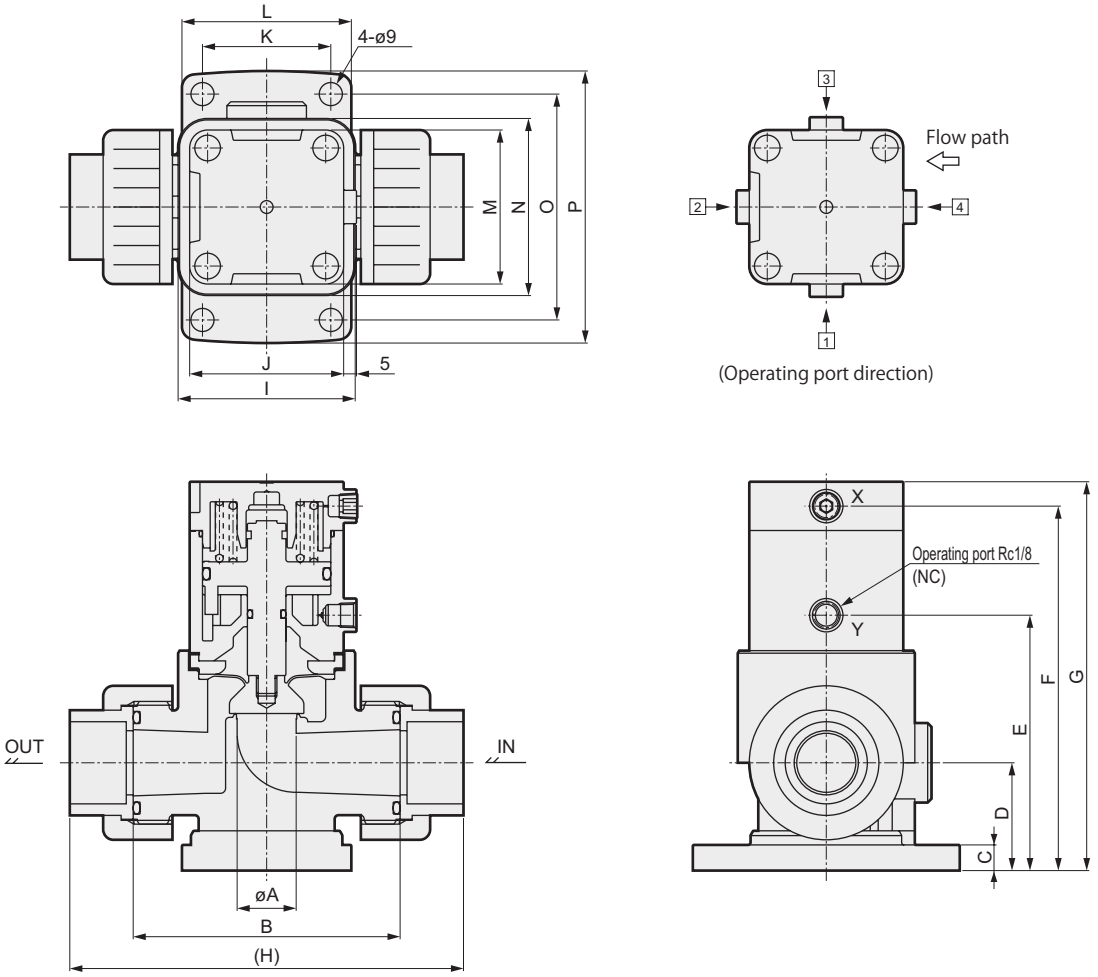

Model No.	A	B	C	D	E	F	G	H	I	J	K	L	M	N	O	P
AMD41L-15AU AMD41L-20AU	18	94	10	35	81	118	127	138	55	46	40	56	46	55	78	96
AMD51L-25AU	23	104	10	42	99.5	142	152	154	69	60	50	66	60	69	88	106
AMD61L-32AU	30	148	20	55	129	186	199	206	79	70	80	100	70	79	120	140
AMD71L-40AU	36	148	20	55	126	208	248	216	92	88	80	100	88	92	120	140

Dimensions (AMD41L to AMD71L)

●With flow rate adjustment
- AMD*1L-*- 1 / 3

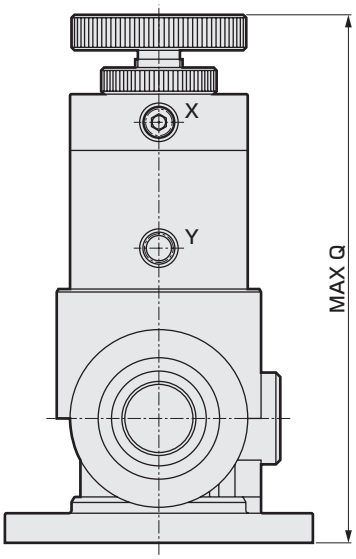

Model No.	Q
AMD41L-15AU AMD41L-20AU	151
AMD51L-25AU	183
AMD61L-32AU	231
AMD71L-40AU	294

●With bypass
- AMD*1L-*- 2 / 3

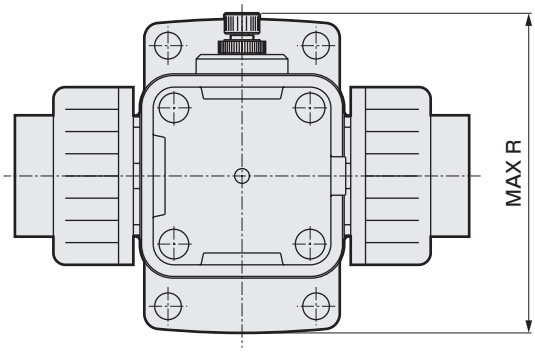

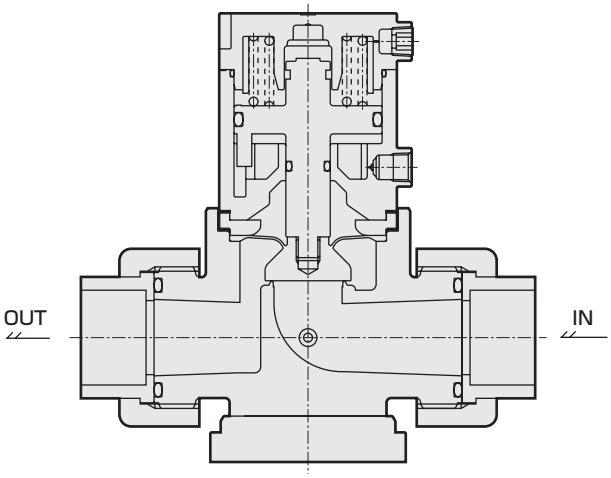

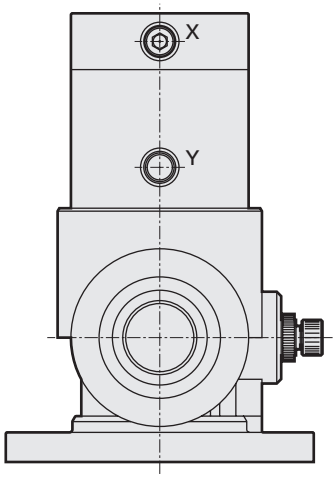

Model No.	R
AMD41L-15AU AMD41L-20AU	101
AMD51L-25AU	110
AMD61L-32AU	133.5
AMD71L-40AU	136

Dimensions (AMD81L)

●PVC union fitting integrated

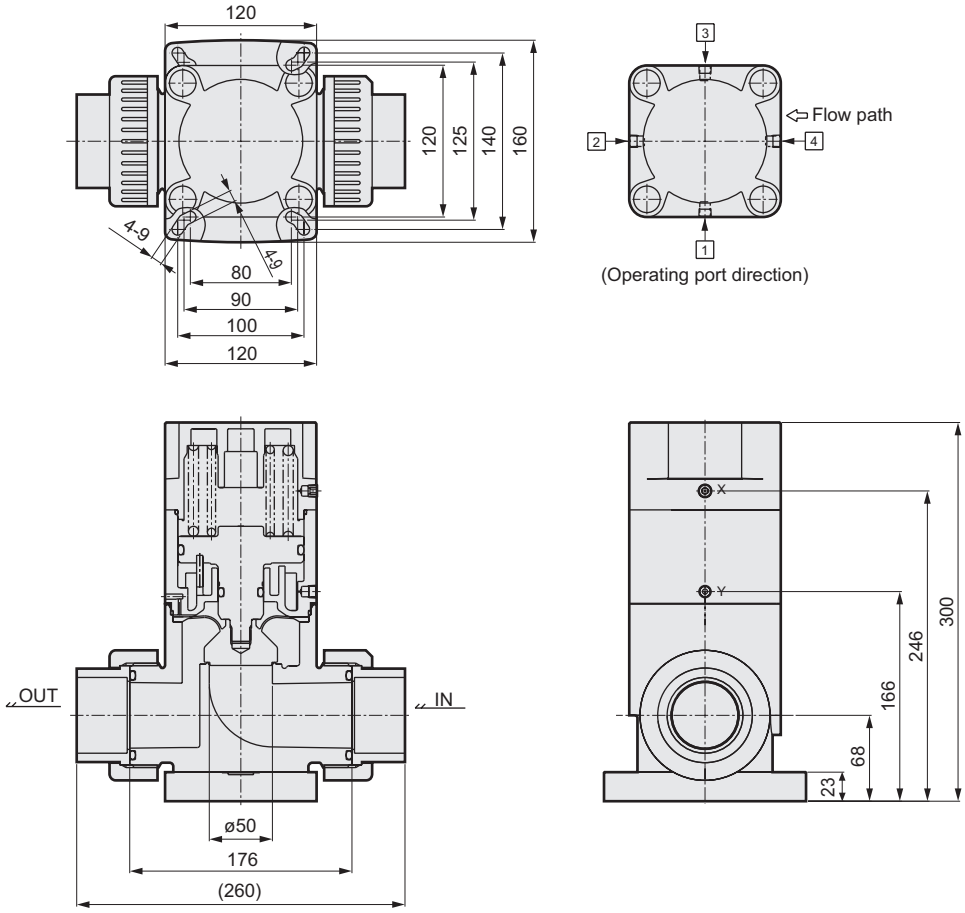

●With flow rate adjustment, bypass

● AMD81L-50AU- 1 / 2 / 3

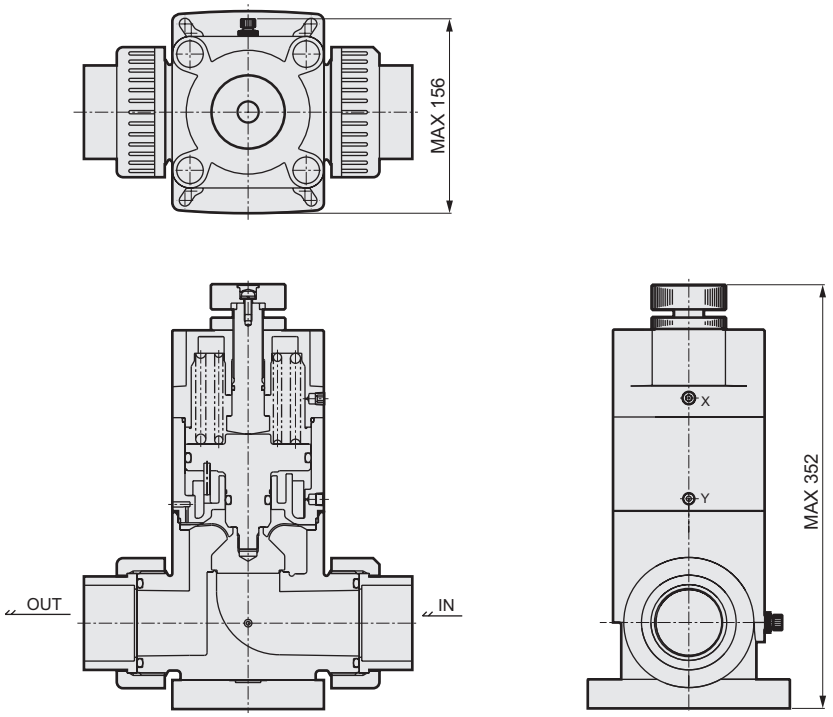

Flow characteristics

●Flow characteristics (water)
Valve differential pressure - internal flow rate ( ): Cv
[Without flow rate adjustment]

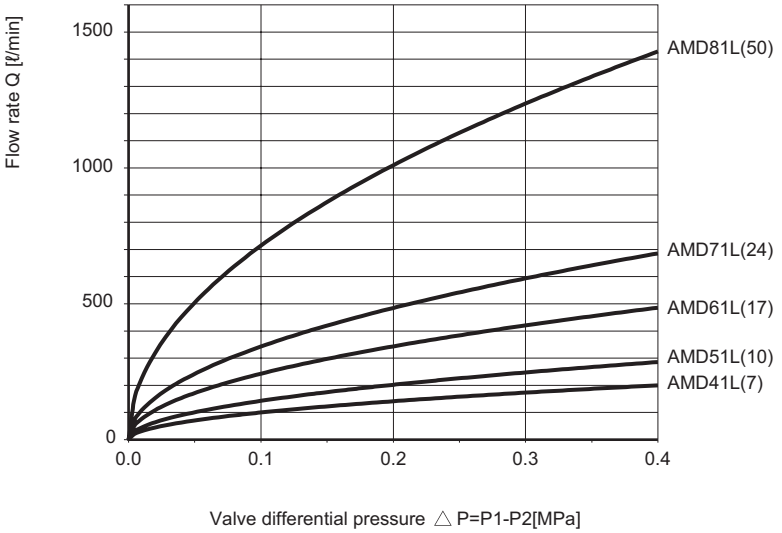

●Bypass Flow characteristics (water)
Valve differential pressure - Flow rate (common for AMD41L to 81L) [when knob is fully open]

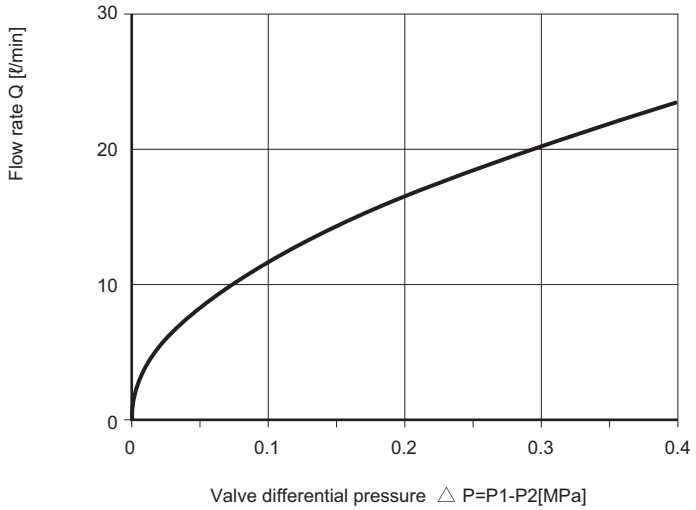

●Flow rate calculation method (water)

$$Q = 45.6 \times Cv \times \frac{\sqrt{(P_1-P_2)}}{\sqrt{G}}$$

Q	:	Flow rate ℓ/min
P_1	:	Primary pressure MPa
P_2	:	Secondary pressure MPa
G	:	Specific gravity (water = 1)
△ $P=P_1-P_2$	:	Valve differential pressure (pressure loss) MPa

*1: The flow rate is a calculated value and may differ in actual use.
Also, the value depends on the operating conditions (fluid, piping, etc.), so use it as a reference only.

Flow characteristics

●Flow characteristics (water)

Knob rotations - Flow rate

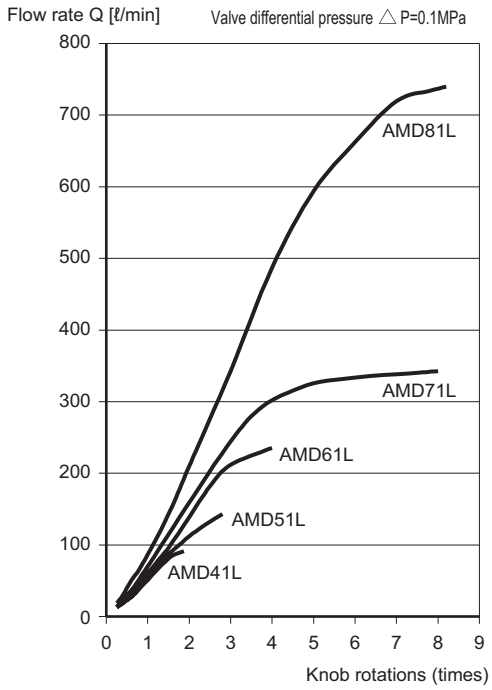

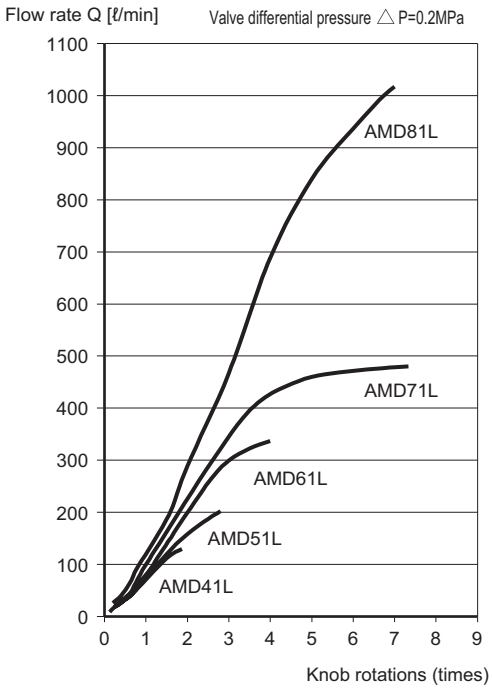

●Bypass Flow characteristics (water)

Knob rotation speed - flow rate (common to AMD41L to 81L)

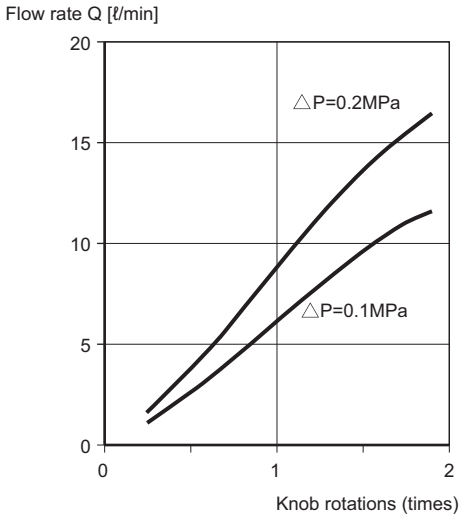

*1 : Vibration and flow rate fluctuation may occur depending on the working conditions such as fluid temperature, differential pressure, and opening. Confirm that the product is acceptable under actual working conditions before use.

MEMO

Air operated valve for chemical liquids

Liquid discharge valve (2-port valve) LYX Series

- Connection PVC union fitting, nominal 25 to 75, JIS 5K flange, nominal 80, 100

Specifications

Item	LYX-0877	LYX-0878	LYX-0879	LYX-0880	LYX-1451	LYX-1452	LYX-1453	LYX-1454
Working fluid	Chemical liquid, pure water (*1)							
Fluid temperature °C	5 to 90 °C				5 to 50 °C		5 to 80°C	
Proof pressure MPa	0.1							
Working pressure MPa	0.02							
Valve seat leakage cm^3/min	0 (water pressure)							
Ambient temperature °C	0 to 40							
Frequency	6 cycles/min. or less							
Mounting orientation	Unrestricted							
Connection	PVC union fitting integrated						JIS 5K flange	
Port size	25	30	40	50	65	75	80	100
Orifice size	ø25	ø32	ø40	ø50	ø65	ø78	ø78	ø100
Operating section: Operating pressure MPa	0.4 to 0.5							
Operating section: Operating port	Rc1/8							
Weight kg	0.4	0.85	0.85	1.4	3.3	3.7	5.6	4.8

*1: Check the compatibility of product structural materials, working fluids and atmosphere.

Internal structure and parts list

●LYX-0878

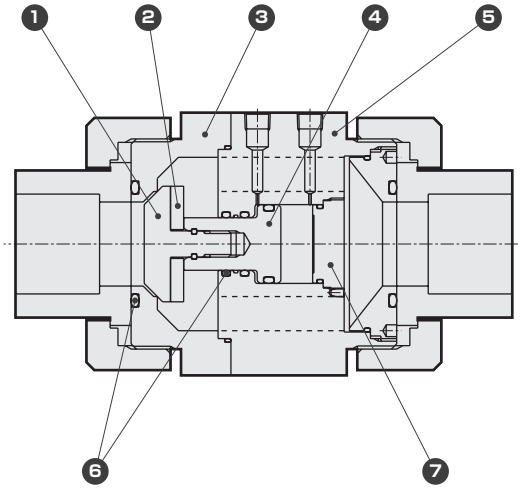

●LYX-1454

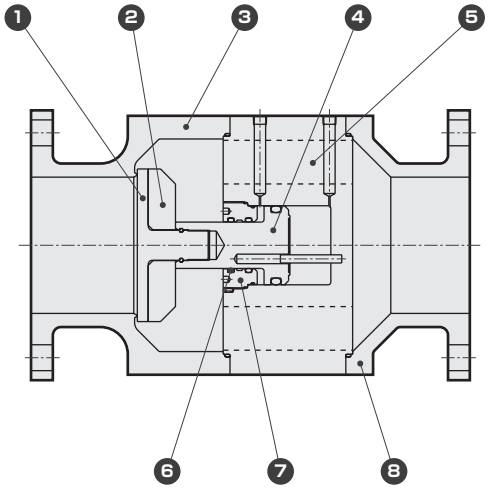

Part No.	Part name	Material (O-ring material) A	Material (O-ring material) I
1	Main valve	PTFE	
2	Spacer	PP	
3	Body	PP	
4	Piston rod	PP	
5	Cylinder	PP	
6	O-ring	EPDM	FKM
7	Cylinder cap	PP	
8	OUT port	PP	

The material and structure may vary depending on the model number. Contact CKD for details.

⚠ Always read the precautions on Intro Pages 7 to 14 before use.

How to order

●PVC union fitting integrated

LYX - 0877-25AU - 2P A

❶Connection ❷O-ring material

Code	Description \ Orifice size	❶ Connection					
		0877-25AU	0878-32AU	0879-40AU	0880-50AU	1451-65AU	1452-75AU
		PVC union fitting					
		Nominal 25	Nominal 30	Nominal 40	Nominal 50	Nominal 65	Nominal 75
		ø25	ø32	ø40	ø50	ø65	ø75
❷ O-ring material							
A	EPDM	●	●	●	●	●	●
I	FKM	●	●	●	●	●	●

●Flange connection

LYX - 1453-80F - 2P A

❶Connection ❷O-ring material

Code	Description \ Orifice size	❶ Connection	
		1453-80F	1454-100F
		JIS 5K flange	
		Nominal 80	Nominal 100
		ø75	ø100
❷ O-ring material			
A	EPDM	●	●
I	FKM	●	●

Dimensions

● PVC union fitting integrated

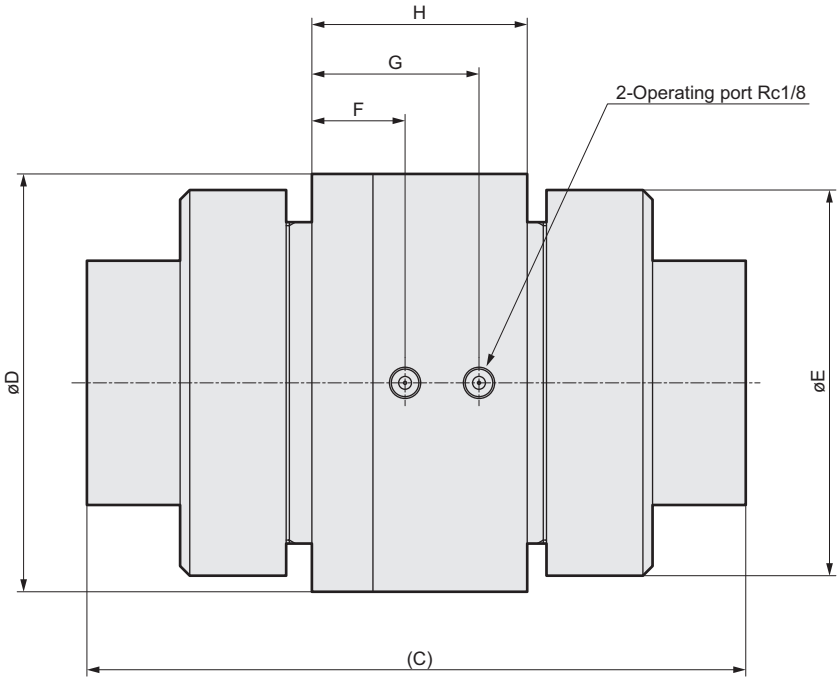

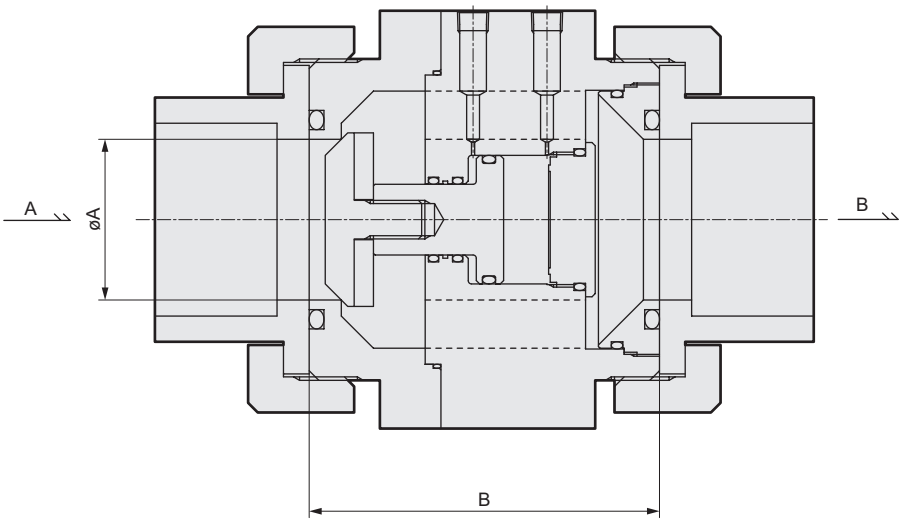

Dimensions / Model No.	A	B	C	D	E	F	G	H
LYX-0877-25AU	25	75	147	76	70	18	32	45
LYX-0878-32AU	32	101	189	100	96	29	49	63
LYX-0879-40AU	40	101	183	100	96	29	49	63
LYX-0880-50AU	50	109	205	130	120	29	52	67
LYX-1451-65AU	65	170	310	160	154	61.5	95	110
LYX-1452-75AU	78	175	320	170	164	61	99	115

Dimensions

● Flange connection

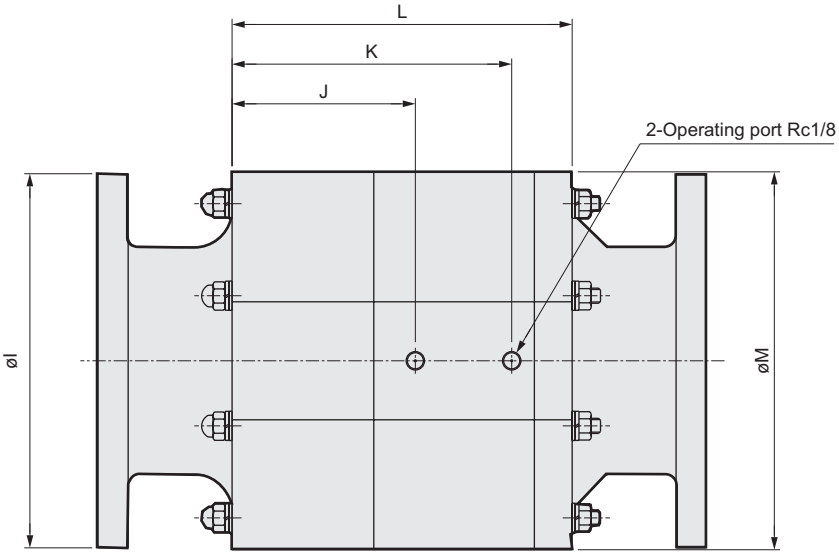

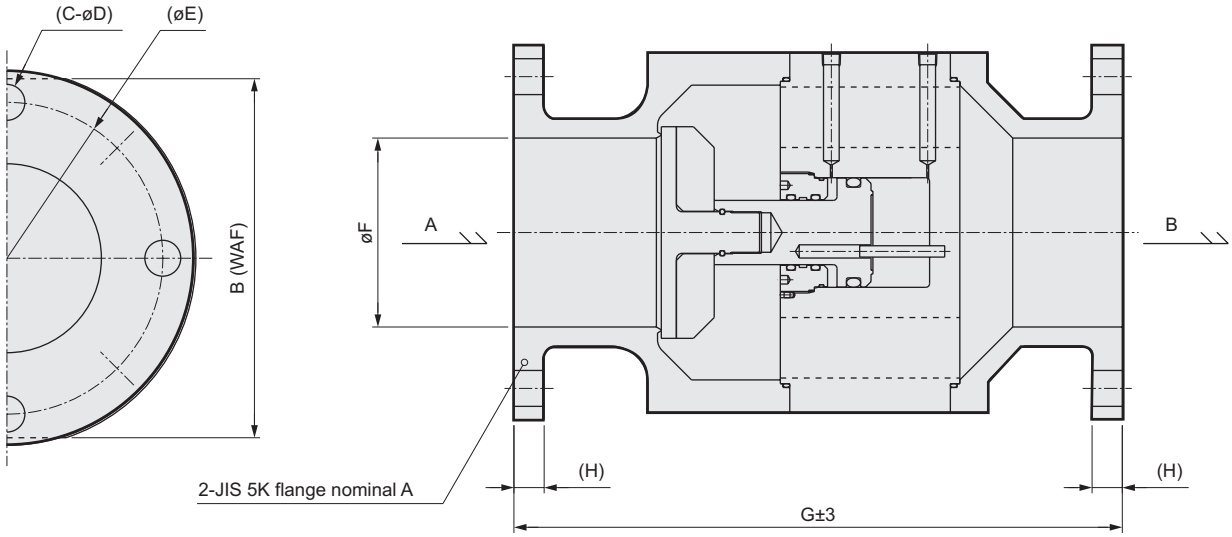

Note: Dimensions in ( ) follow JIS 5K flange shape.

Dimensions / Model No.	A	B	C	D	E	F	G	H	I	J	K	L	M
LYX-1453-80F	80	166	4	19	145	78	310	14	180	91	129	170	170
LYX-1454-100F	100	190	8	19	165	100	322	16	198	97	148	180	195

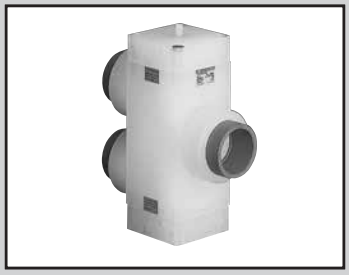

Air operated valve for chemical liquids

Liquid discharge valve (3-port valve) Series

● Connection PVC union fitting, Nominal 30, 40, 50

Specifications

Item		LYX-0882	LYX-0883	LYX-0884
Working fluid		Chemical liquid, pure water (*1)		
Fluid temperature °C		5 to 90		
Proof pressure MPa		0.1		
Working pressure MPa		0.02		
Valve seat leakage cm³/min		0 (water pressure)		
Ambient temperature °C		0 to 40		
Frequency		6 cycles/min. or less		
Mounting orientation		Unrestricted		
Port size (PVC union integrated fitting)		Nominal 30	Nominal 40	Nominal 50
Orifice size		ø32	ø40	ø50
Operating section	Operating pressure MPa	0.4 to 0.5		
	Operating port	Rc1/8		
Weight kg		1.9	1.9	2.6

*1: Check the compatibility of product structural materials, working fluids and atmosphere.

How to order

LYX - 0882-32AU - 3P A

❶Connection ❷O-ring material

Code	Description \ Orifice size	❶ Connection 0882-32AU	0883-40AU	0884-50AU
		PVC union fitting		
		Nominal 30	Nominal 40	Nominal 50
		ø32	ø40	ø50
❷ O-ring material				
A	EPDM	●	●	●
I	FKM	●	●	●

Internal structure and parts list

●LYX-0882

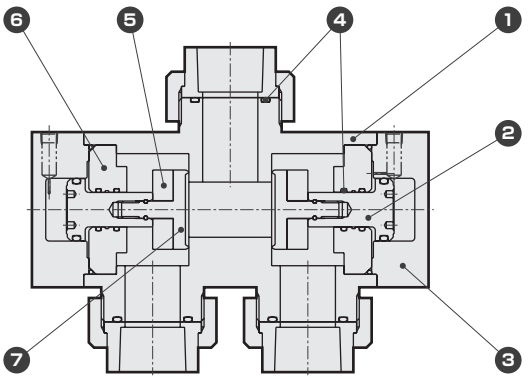

Part No.	Part name	Material (O-ring material) A	I
1	Body	PP	
2	Piston rod	PP	
3	Cylinder	PP	
4	O-ring	EPDM	FKM
5	Spacer	PP	
6	Cylinder adaptor	PP	
7	Main valve	PTFE	

The material and structure may vary depending on the model number. Contact CKD for details.

⚠ Always read the precautions on Intro Pages 7 to 14 before use.

Dimensions

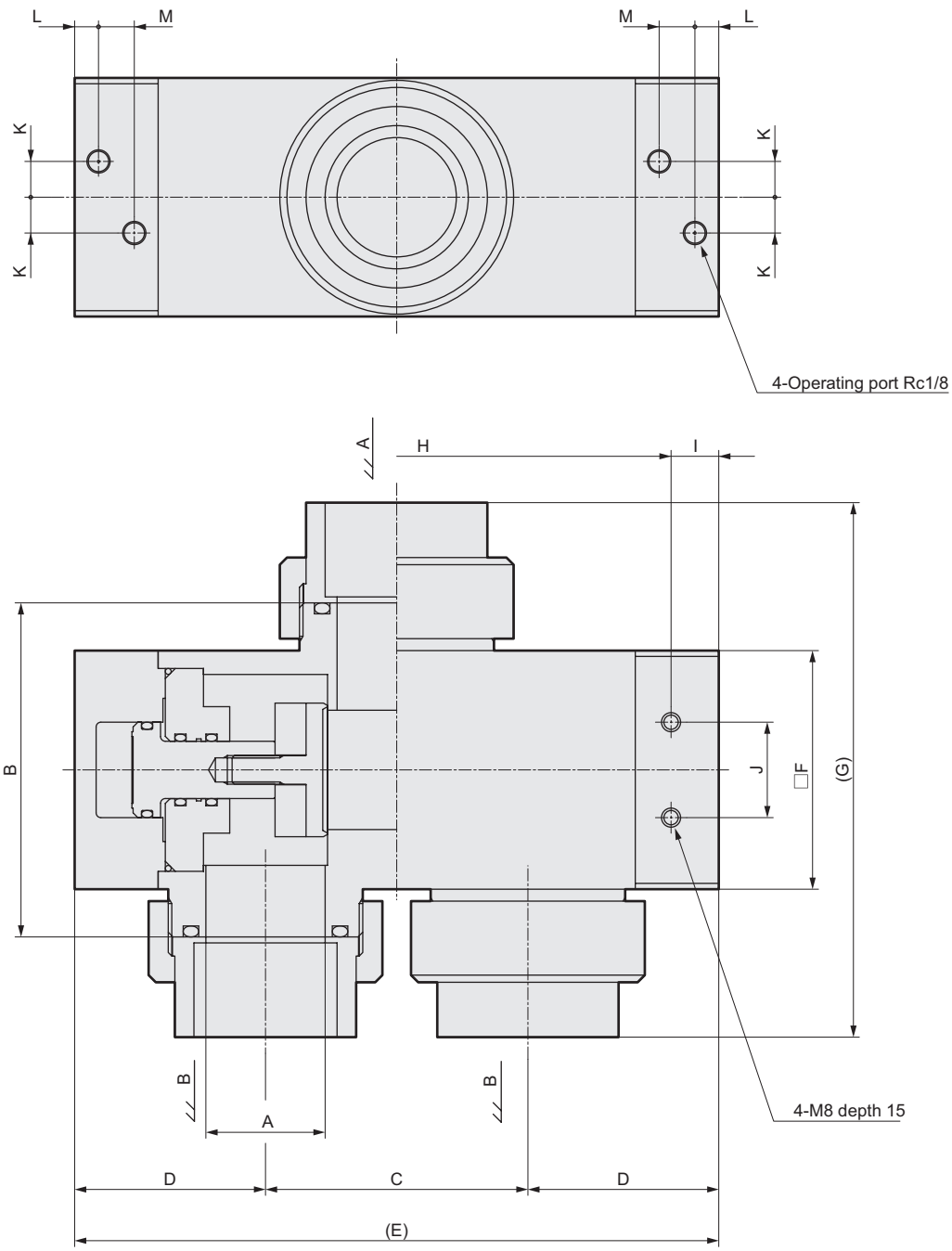

Dimensions / Model No.	A	B	C	D	E	F	G	H	I	J	K	L	M
LYX-0882-32AU	32	130	90	70	230	90	190	200	15	40	15	10	10
LYX-0883-40AU	40	130	90	70	230	90	198	200	15	40	15	10	10
LYX-0884-50AU	50	140	110	80	270	100	224	230	20	40	15	10	15

MEMO

Manual valve

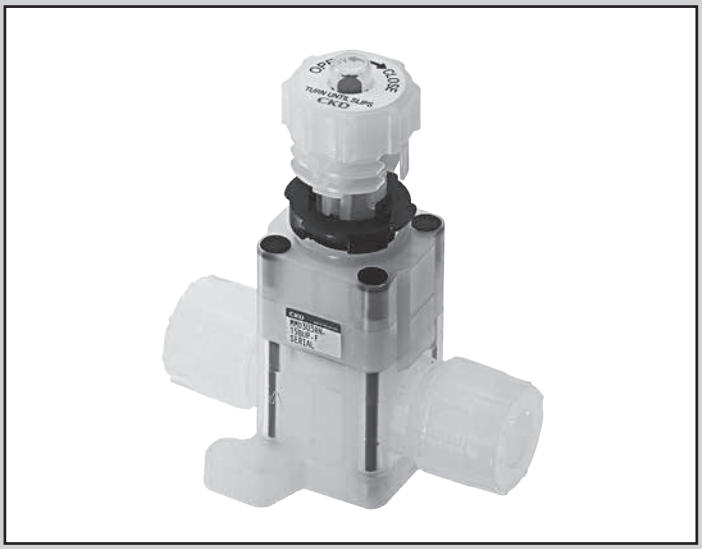

Safety precautions	Intro Page 9
Part3RN Series	
MMD*03RN	104
GMMD*03RN	112
Part2 Series	
MMD*02 (fluoro body)	116
MMD*02 (stainless steel body)	124
GMMD*02	130
High pressure	
MMD*0H	138
Metal-free	
MMD*0M	142
Large bore size	
LYX-1381	146

Easier than ever to choose and use

Cover of the "working pressure range", "working fluid" and "fluid temperature" has been expanded as standard from the conventional model (MMD**2). Added safety with a proprietary overtightening prevention mechanism

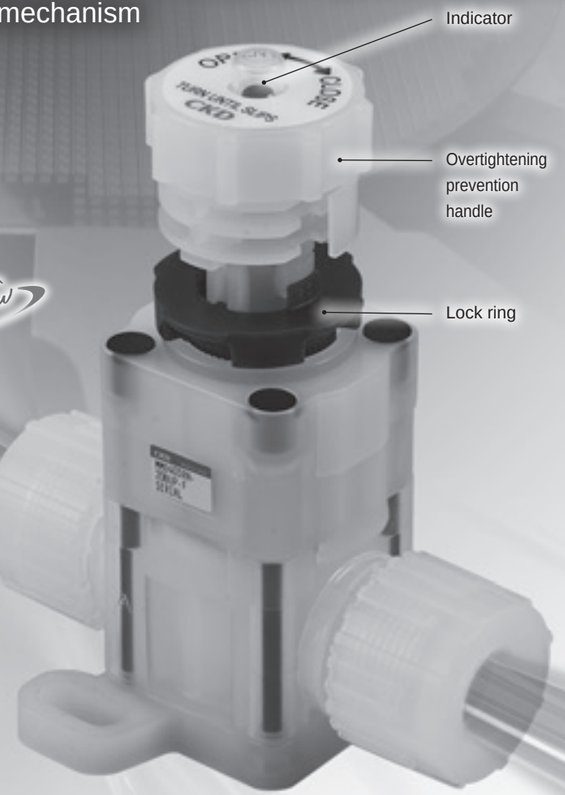

Manual valve for chemical liquids

MMD003RN New
MMD303RN
MMD403RN
MMD503RN

Working pressure range extended

Working pressure range expanded compared to the conventional Part 2 Series. Equal working pressure at ports A and B.

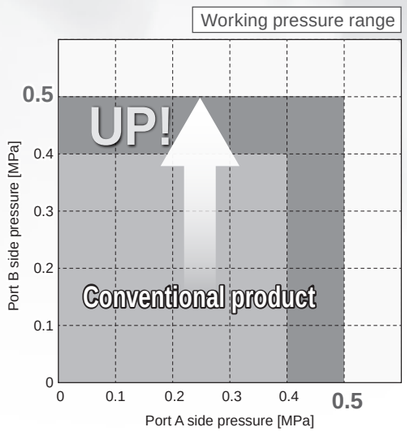

Supports a variety of liquids as standard

The use of highly chemically resistant polyvinylidene fluororesin (PVDF) for the actuator enables support for a wide range of applications as standard, regardless of acidity or alkalinity.

Liquids	General/ Other	Hydrofluoric acid
Conventional product (Part 2)	U specs.	P specs.
MMD*03RN (Part 3RN)	Standard specifications	

Extended fluid temperatures for standard products

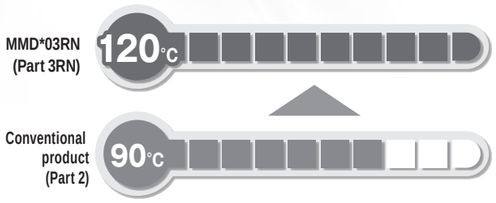

Seal damage prevention

New structure

Handle with overtightening prevention mechanism

With CKD's proprietary structure, the risk of seal damage due to handle operation is minimized.

* MMD303/403/503RN Series and MMD003RN Series have different structures for tightening prevention. Refer to the precautions for details.

Malfunction prevention

Lock ring

Prevents unintended handle opening/closing due to vibration, etc.

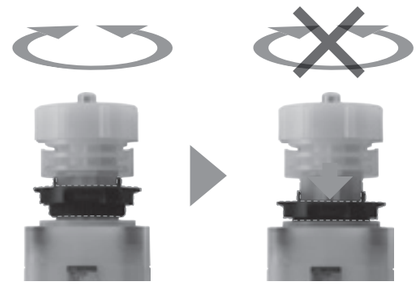

Valve open/closed visual indicator

Indicator

The valve status (open or closed) can be confirmed.

Open | Closed

3 types of mounting methods

New 4-point flange mounting added to the conventional flange and bottom mounting.

Flange mounting | 4-point flange mounting | Bottom mounting

Prevents misoperation

Misoperation prevention cover

By covering the operation section (handle/lock ring), misoperation, human error issues such as carelessness, communication failures, disasters, and accidents are prevented.

*The misoperation prevention cover cannot be used with the GMMD303/403/503RN Series.

Place cover and lock it in.

Locks, warning tags, etc., can be attached.

Size variation

Tube connection	1/4″ 6 mm	3/8″ 10 mm	1/2″ 12 mm	3/4″	1″ 25 mm
MMD003RN (New) Industry's smallest class Face-to-Face dimensions	●	●			
MMD303RN		●	●		
MMD403RN				●	
MMD503RN					●
GMMD*03RN	●	●	●	●	●

GMMD Series

Manifold keeps it compact.

*Contact CKD for details.

Manual valve for chemical liquids

MMD*03RN Series

RoHS CAD

Export controlled items

*Eligibility: MMD403RN, MMD503RN

Specifications

Item \ Size		MMD003RN □25	MMD303RN □36	MMD403RN □46	MMD503RN □60
Working fluid		Chemical liquids, pure water, N_2 gas, air			
Fluid temperature	°C	5 to 120 (*1, *2)			
Proof pressure	MPa	1.0			
Working pressure range	(A→B) MPa	0 to 0.5			
	(B→A) MPa	0 to 0.5			
Valve seat leakage	cm^3/min	0 (water pressure)			
Back pressure	MPa	0 to 0.5			
Ambient temperature	°C	0 to 60			
Mounting orientation		Unrestricted			
Connection		Super 300 Pillar fitting P Series F-LOCK 60 Series			
Weight	kg	0.09	0.22	0.44	0.87

*1: For hydrofluoric acid or chemical liquids containing hydrofluoric acid, use within the range of 5 to 80°C.
*2: 5 to 100°C if the connection is F-LOCK 60 Series.
*3: Refer to pages 110 to 111 for Cv and flow characteristics.

Structure diagram and parts list

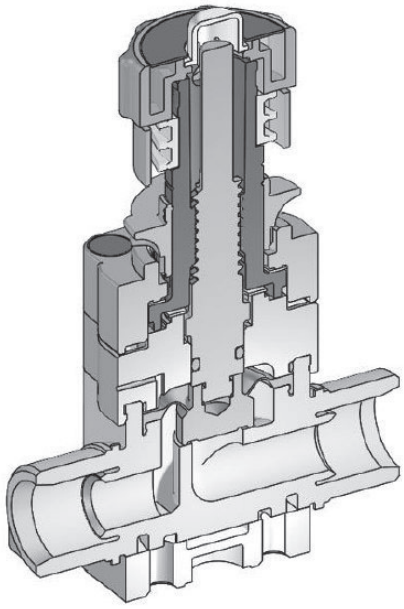

Part name	Material
Body (wetted parts)	PFA or PTFE
Diaphragm (wetted parts)	PTFE
Actuator	PVDF
O-ring	FEPM
Metal parts	Stainless steel (fluoro resin coating)
Mounting plate	PVDF
Misoperation prevention cover	PP

Working pressure

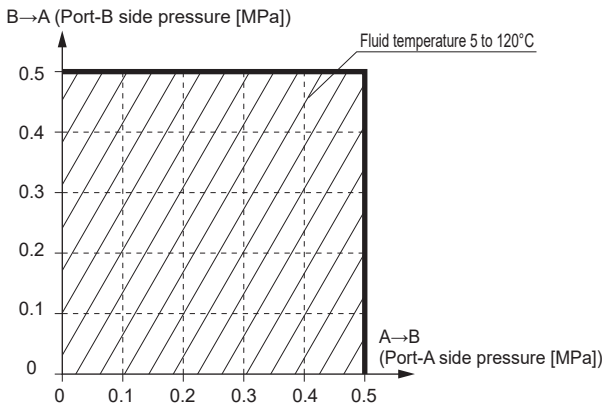

⚠ Always read the precautions on Intro Pages 7 to 14 before use.

How to order

● Body

MMD003RN - **8BU** **P** - **F**

MMD303RN

MMD403RN

MMD503RN

Model No.

❶Connection size

❷Connection

❸Mounting method

Code	Description				
❶ **Connection size**		**Selectable models**			
Metric	**Tube size**	**MMD0**	**MMD3**	**MMD4**	**MMD5**
6U	ø6 x ø4	●			
8U	ø8 x ø6	●			
10U	ø10 x ø8	●	●		
12U	ø12 x ø10		●		
25U	ø25 × ø22				●
Inching	**Tube size**	**MMD0**	**MMD3**	**MMD4**	**MMD5**
8BU	1/4"×5/32"	●			
10BU	3/8"×1/4"	●	●		
15BU	1/2"×3/8"		●		
20BU	3/4"×5/8"			●	
25BU	1"×7/8"				●

❷ **Connection**	
P	Super 300 Pillar fitting P Series
R	F-LOCK 60 Series

❸ **Mounting method**	
F	Flange mounting
H	4-point flange mounting
X	Bottom mounting

⚠ Precautions for model No. selection

* Body material
Connection F-LOCK 60 Series is PTFE body.

● Misoperation prevention cover

- MMD003RN-C
- MMD303RN-C
- MMD403RN-C
- MMD503RN-C

Dimensions

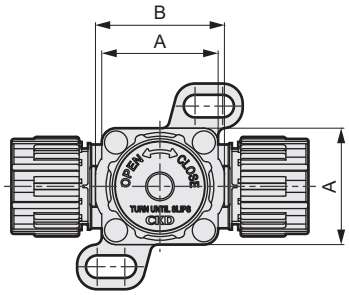

Super 300P Series

Connection (connection size + type)	C
6UP, 8BUP	19
8UP	22
10UP, 10BUP	25
12UP, 15BUP	29
20BUP	36
25UP, 25BUP	43

F-LOCK 60 Series

Connection (connection size + type)	C
6UR	30
8BUR	31
8UR	31
10UR	37
10BUR	39
12UR	37
15BUR	39
20BUR	44
25UR	49.5
25BUR	51

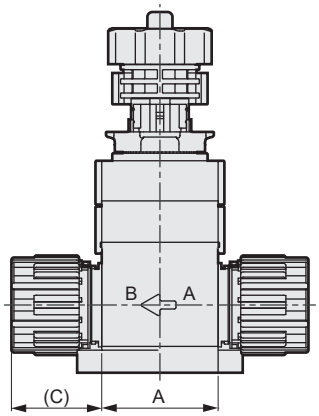

Fitting dimensions

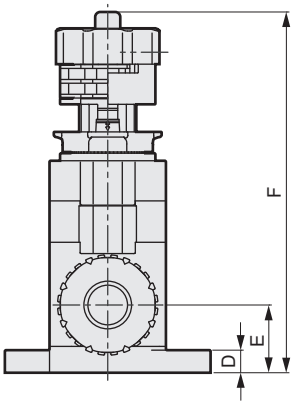

● F Flange mounting (MMD 0/3/4)

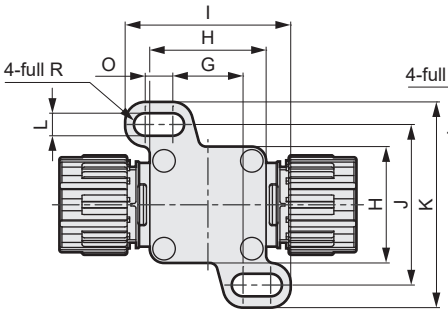

● F Flange mounting (MMD5)

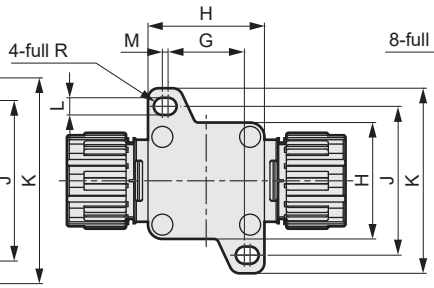

● H 4-point flange mounting

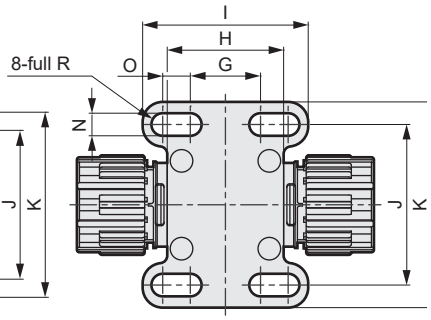

Model	A	B	D	E	F	G	H	I	J	K	L	M	N	O
MMD003RN	25	-	6	19	83	15	25	30	33	39	2-3.5	2-4.5	4-3.5	4-4.5
MMD303RN	36	39	8.5	21	116	22	36	50	50	62	2-7	2-8	4-7	4-8
MMD403RN	46	51	9	27	144	28	46	66	64	82	2-9	2-11	4-9	4-11
MMD503RN	60	65	10	35	184	40	61	78	78	97	2-9	2-3	4-9	4-11

● X Bottom mounting

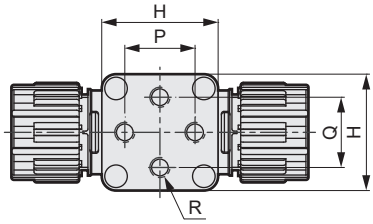

Model	P	Q	R
MMD003RN	-	14±0.3	2-M6 depth 8
MMD303RN	22±0.3	22±0.3	4-M6 depth 9
MMD403RN	28±0.3	28±0.3	4-M8 depth 10
MMD503RN	40±0.3	40±0.3	4-M8 depth 13

Dimensions

● Misoperation prevention cover

・MMD*03RN-C

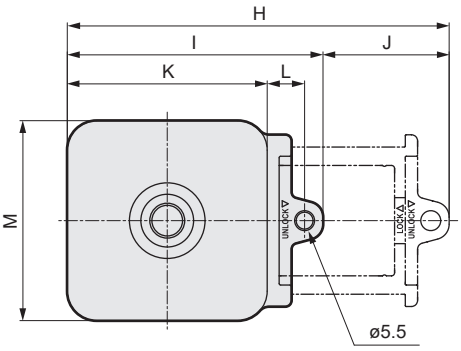

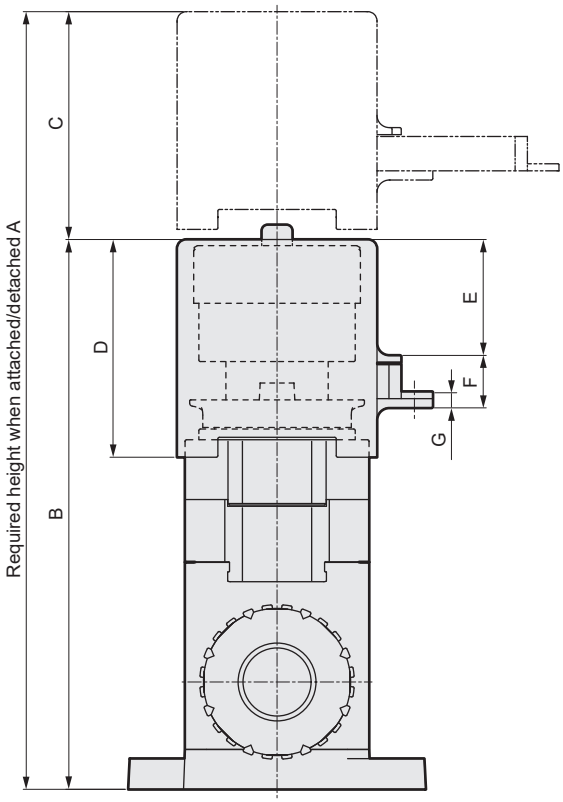

* Mounting the misoperation prevention cover
Mountable in any direction (4 directions).

Model No.	A	B	C	D	E	F	G	H	I	J	K	L	M
MMD003RN-C	105	79	26	22	6.5	8	5	60	44	16	29	10	25
MMD303RN-C	166	112	54	51	25	13	5	78	55	23	40	10	40
MMD403RN-C	203	139	64	60	31	15	5	99	68	31	51	11	51
MMD503RN-C	254	179	75	71	38	17	5.5	125	83	71	65	12	65

MMD*03RN Series Connection and Cv

MMD303RN - 15BU P - F

- 15BU: Connection size
- P: Connection

Super 300 pillar fitting (connection code: P)

	Connection size	Connection	Applicable tube size	Selectable model sizes and Cv			
				MMD0	MMD3	MMD4	MMD5
Metric	6U	P	ø6 × ø4	0.34			
	8U	P	ø8 × ø6	0.64			
	10U	P	ø10 × ø8	0.8	1.25		
	12U	P	ø12 × ø10		1.8		
	25U	P	ø25 × ø22				8
Inch	8BU	P	1/4" × 5/32"	0.34			
	10BU	P	3/8" × 1/4"	0.8	1.25		
	15BU	P	1/2" × 3/8"		1.8		
	20BU	P	3/4" × 5/8"			5	
	25BU	P	1" × 7/8"				8

F-LOCK 60 Series (connection code: R)

	Connection size	Connection	Applicable tube size	Selectable model sizes and Cv			
				MMD0	MMD3	MMD4	MMD5
Metric	6U	R	ø6 × ø4	0.28			
	8U	R	ø8 × ø6	0.64			
	10U	R	ø10 × ø8	0.7	1		
	12U	R	ø12 × ø10		1.6		
	25U	R	ø25 × ø22				8
Inch	8BU	R	1/4" × 5/32"	0.28			
	10BU	R	3/8" × 1/4"	0.64	0.7		
	15BU	R	1/2" × 3/8"		1.6		
	20BU	R	3/4" × 5/8"			4.5	
	25BU	R	1" × 7/8"				8

MMD003RN to MMD503RN Flow characteristics

● Flow characteristics (water)

Differential pressure - internal flow rate ( ): Cv

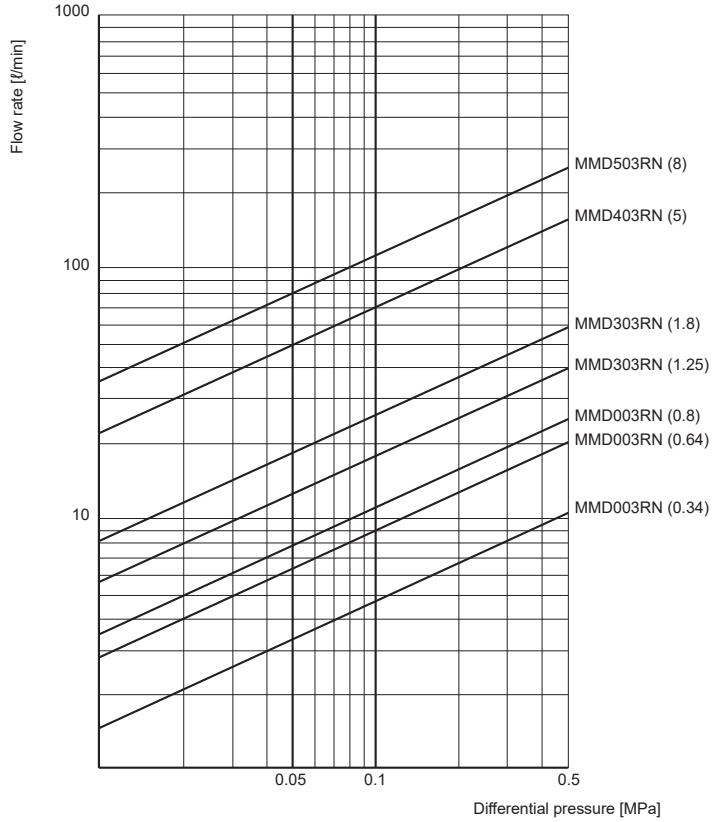

Manual valve for chemical liquids (manifold/branch valve) **Made-to-order product**

GMMD*03RN Series

RoHS CAD

Export controlled items

*Eligibility: GMMD403RN, GMMD503RN

Specifications

Item \ Size		GMMD003RN □25	GMMD303RN □36	GMMD403RN □46	GMMD503RN □60
Working fluid		Chemical liquids, pure water, N_2 gas, air			
Fluid temperature °C		5 to 120 (*1, *2)			
Proof pressure MPa		1.0			
Working pressure range (A→B) MPa		0 to 0.5			
Working pressure range (B→A) MPa		0 to 0.5			
Valve seat leakage cm^3/min		0 (water pressure)			
Back pressure MPa		0 to 0.5			
Ambient temperature °C		0 to 60			
Mounting orientation		Unrestricted			
Connection		Super 300 Pillar fitting P Series F-LOCK 60 Series			
Weight kg	One station	0.12	0.27	0.5	1.2
	2 stations	0.22	0.54	1.0	2.4
	3 stations	0.33	0.81	1.5	3.8
	4 stations	0.43	1.0	1.9	5.0
	5 stations	0.54	1.4	2.4	-

*1: For hydrofluoric acid or chemical liquids containing hydrofluoric acid, use within the range of 5 to 80°C.
*2: 5 to 100°C if the connection is F-LOCK 60 Series.

Structure and parts list

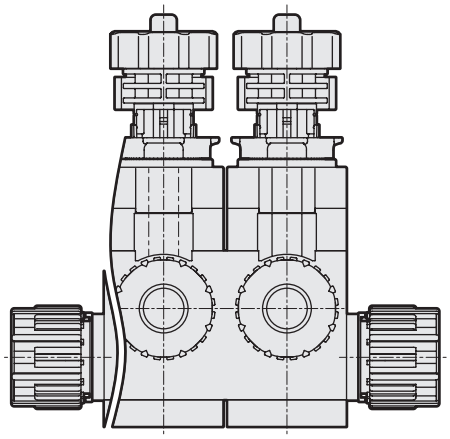

Part name	Material
Body (wetted parts)	PFA or PTFE
Diaphragm (wetted parts)	PTFE
Actuator	PVDF
O-ring	FEPM
Metal parts	Stainless steel (fluoro resin coating)
Mounting plate	PVDF
Misoperation prevention cover	PP

Working pressure

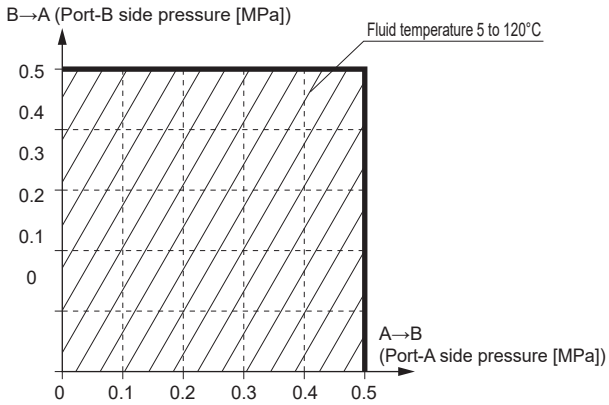

⚠ Always read the precautions on Intro Pages 7 to 14 before use.

How to order

● Body

GMMD003RN - 8BU P - 5 W
GMMD303RN
GMMD403RN
GMMD503RN

Model No.

❶Connection size

❷Connection

❸Station No.

❹Port A position

Code	Description				
❶ Connection size		Selectable models			
Metric	Tube size	GMMD0	GMMD3	GMMD4	GMMD5
6U	ø6 x ø4	●			
8U	ø8 x ø6	●			
10U	ø10 x ø8	●	●		
12U	ø12 x ø10		●		
25U	ø25 × ø22				●
Inching	Tube size	GMMD0	GMMD3	GMMD4	GMMD5
8BU	1/4" × 5/32"	●			
10BU	3/8" × 1/4"	●	●		
15BU	1/2" × 3/8"		●		
20BU	3/4" × 5/8"			●	
25BU	1" × 7/8"				●

❷ Connection	
P	Super 300 Pillar fitting P Series
R	F-LOCK 60 Series

❸ Station No.		Selectable models			
		GMMD0	GMMD3	GMMD4	GMMD5
1	1 station	●	●	●	●
2	2 stations	●	●	●	●
3	3 stations	●	●	●	●
4	4 stations	●	●	●	●
5	5 stations	●	●	●	

❹ Port A position	
L	Left
R	Right
W	Both sides

●Misoperation prevention cover

・MMD003RN-C

* The misoperation prevention cover cannot be used with the GMMD3/4/5 Series.

Dimensions

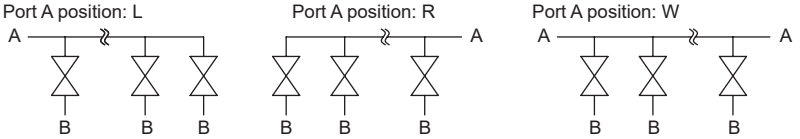

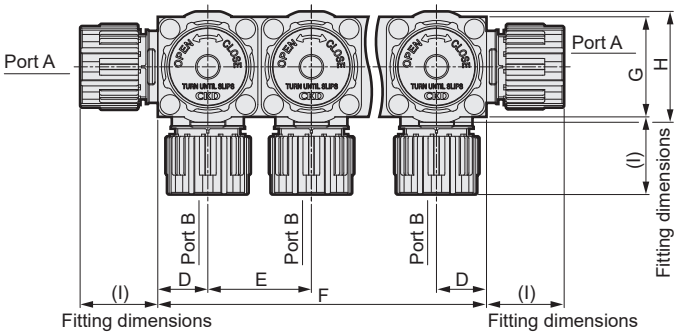

Model	A	B	C	D	E	G	H
GMMD003RN	19	28.5	87	12.5	Table 1	25	-
GMMD303RN	21	35	128	18	38	36	39
GMMD403RN	27	46	160	23	48	46	51
GMMD503RN	35	60	199	30	62	60	65

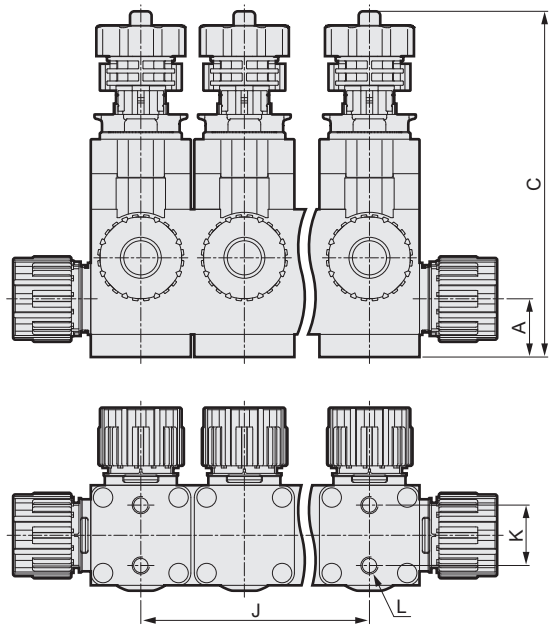

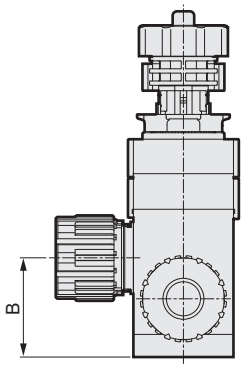

Super 300P Series

Connection (connection size + type)	I
6UP, 8BUP	19
8UP	22
10UP, 10BUP	25
12UP, 15BUP	29
20BUP	36
25UP, 25BUP	43

F-LOCK 60 Series

Connection (connection size + type)	I
6UR	30
8BUR	31
8UR	31
10UR	37
10BUR	39
12UR	37
15BUR	39
20BUR	44
25UR	49.5
25BUR	51

Table 1

Connection (connection size + type)	Station No.	E	F	J	L
6UP, 8BUP 8UP 6UR, 8BUR 8UR	1	-	25	-	2-M6 depth 8
	2	26	51	26±0.3	4-M6 depth 8
	3		77	52±0.4	
	4		103	78±0.4	
	5		129	104±0.5	
10UP, 10BUP 10UR, 10BUR	1	-	25	-	2-M6 depth 8
	2	31	56	31±0.3	4-M6 depth 8
	3		87	62±0.4	
	4		118	93±0.5	
	5		149	124±0.5	

Model	Station No.	F	J	K	L
GMMD003RN	Table 1			14±0.3	Table 1
GMMD303RN	1	36	-	22±0.3	4-M6 depth 9
	2	74	38±0.3		
	3	112	76±0.4		
	4	150	114±0.5		
	5	188	152±0.7		
GMMD403RN	1	46	-	28±0.3	4-M8 depth 10
	2	94	48±0.4		
	3	142	96±0.5		
	4	190	144±0.5		
	5	238	192±0.7		
GMMD503RN	1	60	-	40±0.3	4-M8 depth 13
	2	122	62±0.4		
	3	184	124±0.5		
	4	246	186±0.7		

Dimensions

● Misoperation prevention cover
(GMMD003RN)

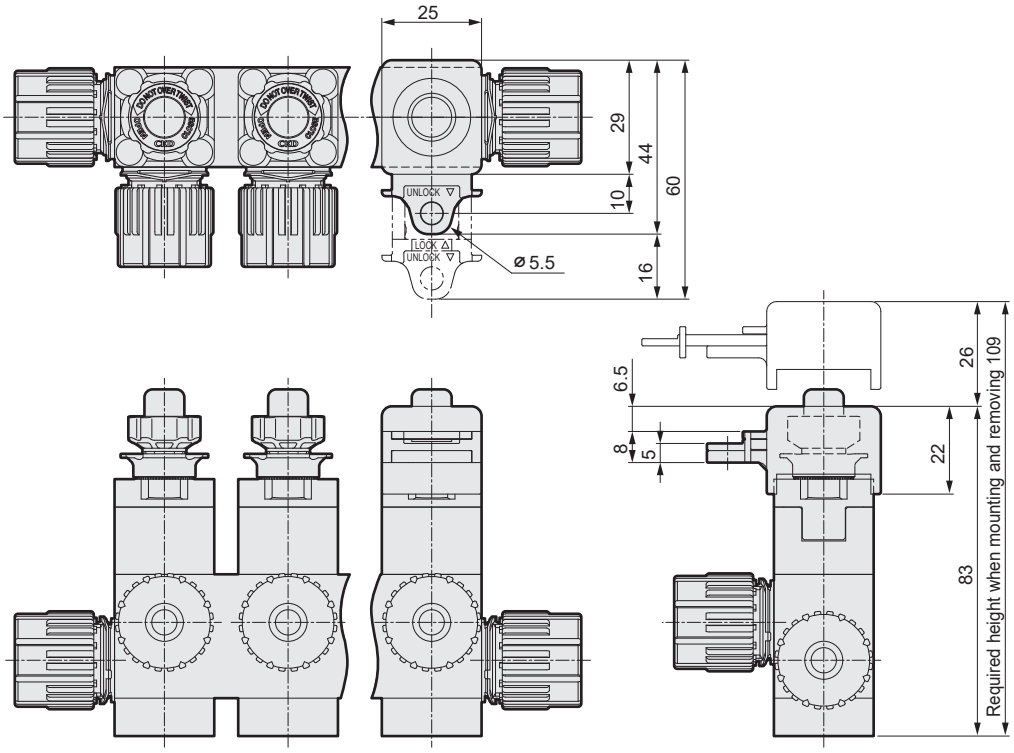

Manual valve for chemical liquids

MMD$^{3}_{4}_{5}$02 Series

● Connection tube size: ø10, ø12, ø25, 3/8″, 1/2″, 3/4″, 1"

RoHS CAD

Export controlled items

*Eligibility: MMD402, 502

Specifications

Item	MMD302						MMD402			MMD502
Working fluid	Chemical liquids, pure water, air, N_2 gas (*1)									
Fluid temperature °C	5 to 90 (*2)									
Proof pressure MPa	1.2									
Working pressure (A→B)MPa	0 to 0.4									
Working pressure (B→A)MPa	0 to 0.4									
Valve seat leakage cm^3/min	0 (water pressure)									
Back pressure MPa	0 to 0.4									
Ambient temperature°C	0 to 60									
Mounting orientation	Unrestricted									
Connection	O.D. ø10 tube connection (integrated fitting) O.D. ø12 tube connection (integrated fitting) O.D. 3/8" tube connection (integrated fitting) O.D. 1/2" tube connection (integrated fitting)						O.D. 3/4" tube connection (Integrated fitting)			O.D. ø25 tube connection (integrated fitting) O.D. 1" tube connection (integrated fitting)
Orifice size	ø6.3	ø6.4	ø7.5	Ø 8	ø9.4	ø9.5	ø10	ø14.7	ø15.9	ø16	ø20
Cv value	0.8		1.25		1.8			5			8
Weight kg	0.20							0.40			0.76

*1: Check the compatibility of product structural materials, working fluids and atmosphere.
*2: For use with hydrofluoric acid, or when the fluid temperature exceeds 40°C, consult with CKD.
*3: MMD*02 Series cannot be used for flow rate adjustment. Use it either fully closed or fully opened.

Always read the precautions on Intro Pages 7 to 14 before use.

Internal structure and parts list

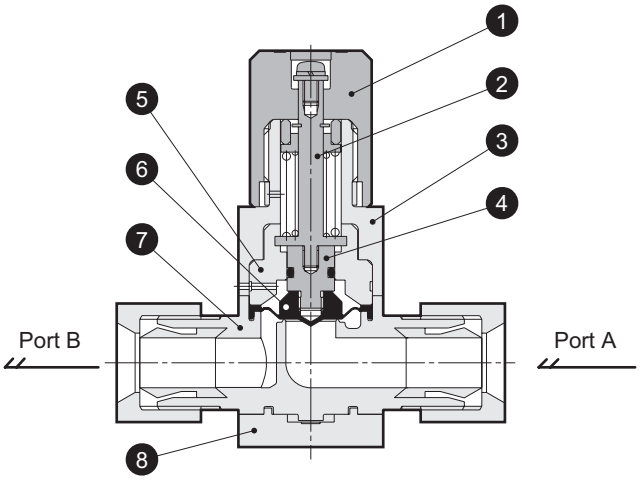

Part No.	Part name	Material (by fluid code)	
		U	P
1	Knob	PE	
2	Shaft	SUS304 (with fluoro resin coating)	
3	Cover	PP (*1)	PP (*1)
4	Rod	PP	
5	Diaphragm holder	PP (*1)	PP (*1)
6	Diaphragm	PTFE	
7	Body	PFA, PTFE	
8	Mounting plate	PP (*1)	PP (*1)

*1: The color tone differs between fluid code U and fluid code P.
The material and structure may vary depending on the model number.
Contact CKD for details.

How to order

●MMD302 Series (connection: ø10, 3/8" tube connection)

MMD302 - 10UP - 8 - U

- MMD302: Model No.
- 10UP: ❶ Connection
- 8: Orifice diameter
- U: ❷ Fluid

❶ Connection	10US	10BUS	10UP	10BUP	10UA	10BUA	10UR	10BUR	10UK	10BUK	10BUW
	Super Type Pillar fitting Integrated		Super 300 Pillar fitting P series integrated		F-LOCK 20A Series Integrated fitting		F-LOCK 60 Series Integrated fitting		Final Lock Fitting Integrated		Flaretek Fitting Integrated
	ø10 x ø8 tube connection	3/8" x 1/4" tube connection	ø10 x ø8 tube connection	3/8" x 1/4" tube connection	ø10 x ø8 tube connection	3/8" x 1/4" tube connection	ø10 x ø8 tube connection	3/8" x 1/4" tube connection	ø10 x ø8 tube connection	3/8" x 1/4" tube connection	3/8" x 1/4" tube connection
Code / Description / Orifice size	ø8						ø7.5	ø6.4	ø7.5		ø6.3
Body material											
PFA: PFA molded body, PTFE: PTFE machined body	PFA		PFA		PFA		PFA		PFA		PTFE
❷ Fluid											
U General chemical liquids	●	●	●	●	●	●	●	●	●	●	●
P For hydrofluoric acid	●	●	●	●	●	●	●	●	●	●	●

* Machined PTFE products will be manufactured on a per-order basis.

●Model No. for bottom mounting

MMD302 - ❶ - 8 - ❷ X

- X: Bottom mounting

How to order

●MMD302 Series (connection: ø12, 1/2" tube connection)

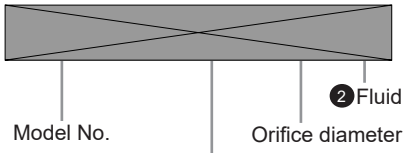

❶ Connection												
12US	15BUS	12UP	15BUP	12UA	15BUA	12UR	15BUR	12UK	15BUK	15BUW
Super Type Pillar fitting Integrated		Super 300 Pillar fitting P series integrated		F-LOCK 20A Series Integrated fitting		F-LOCK 60 Series Integrated fitting		Final Lock Fitting Integrated		Flaretek Fitting Integrated
ø12 x ø10 tube connection	1/2" x 3/8" tube connection	ø12 x ø10 tube connection	1/2" x 3/8" tube connection	ø12 x ø10 tube connection	1/2" x 3/8" tube connection	ø12 x ø10 tube connection	1/2" x 3/8" tube connection	ø12 x ø10 tube connection	1/2" x 3/8" tube connection	1/2" x 3/8" tube connection
Code / Description / Orifice size		ø10				ø9.5		ø10		ø9.4
Body material		PFA molded body								

❷ Fluid							
U	General chemical liquids	●	●	●	●	●	●
P	For hydrofluoric acid	●	●	●	●	●	●

●Model No. for bottom mounting

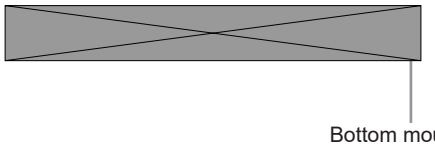

How to order

●MMD402 Series

MMD402 - 20BUA -16- U

- MMD402: Model No.
- 20BUA: ❶ Connection
- 16: Instruction on orifice size
- U: ❷ Fluid

❶ Connection						
	20BUS	20BUP	20BUA	20BUR	20BUK	20BUW
	Super-type pillar integrated fitting	Super 300 type Pillar fitting P Series integrated	F-LOCK 20A Series Integrated fitting	F-LOCK 60 Series Integrated fitting	Final Lock Integrated fitting	Flaretek Integrated fitting
	3/4" x 5/8" tube connection					
Code / Orifice size / Description	ø16			ø15.9	ø16	ø14.7
Body material	PFA		PTFE	PFA	PTFE	PFA

❷ Fluid							
U	General chemical liquids	●	●	●	●	●	●
P	For hydrofluoric acid	●	●	●	●	●	●

* Machined PTFE products will be manufactured on a per-order basis.

●Model No. for bottom mounting

MMD402 - ❶ -16- ❷ X

- X: Bottom mounting

How to order

●MMD502 Series

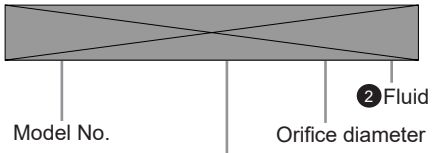

Code	Description \ Orifice size	❶ Connection									
		25US	25BUS	25UP	25BUP	25BUA	25UR	25BUR	25UK	25BUK	25BUW
		Super Type Pillar fitting Integrated		Super 300 Pillar fitting P series integrated		F-LOCK 20A Series Fitting Integrated	F-LOCK 60 Series Integrated fitting		Final Lock Fitting Integrated		Flaretek Fitting Integrated
		ø25 × ø22 tube connection	1" x 7/8" tube connection	ø25 × ø22 tube connection	1" x 7/8" tube connection	1" × 7/8" tube connection (*1)	ø25 × ø22 tube connection	1" x 7/8" tube connection	ø25 × ø22 tube connection	1" x 7/8" tube connection	1" x 7/8" tube connection
		ø20									
Body material											
PFA: PFA molded body, PTFE: PTFE machined body		PFA		PFA		PTFE	PTFE		PTFE		PTFE
❷ Fluid											
U	General chemical liquids	●	●	●	●	●	●	●	●	●	●
P	For hydrofluoric acid	●	●	●	●	●	●	●	●	●	●

* Machined PTFE products will be manufactured on a per-order basis.

●Model No. for bottom mounting

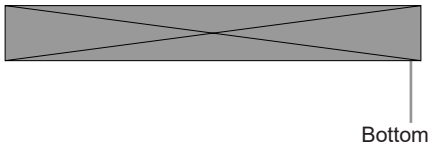

Precautions for model No. selection

*1: Can also be used for ø25 x ø22 tube connection.

Dimensions

●Integrated fitting

- MMD302- *1
- MMD402- *1
- MMD502- *1

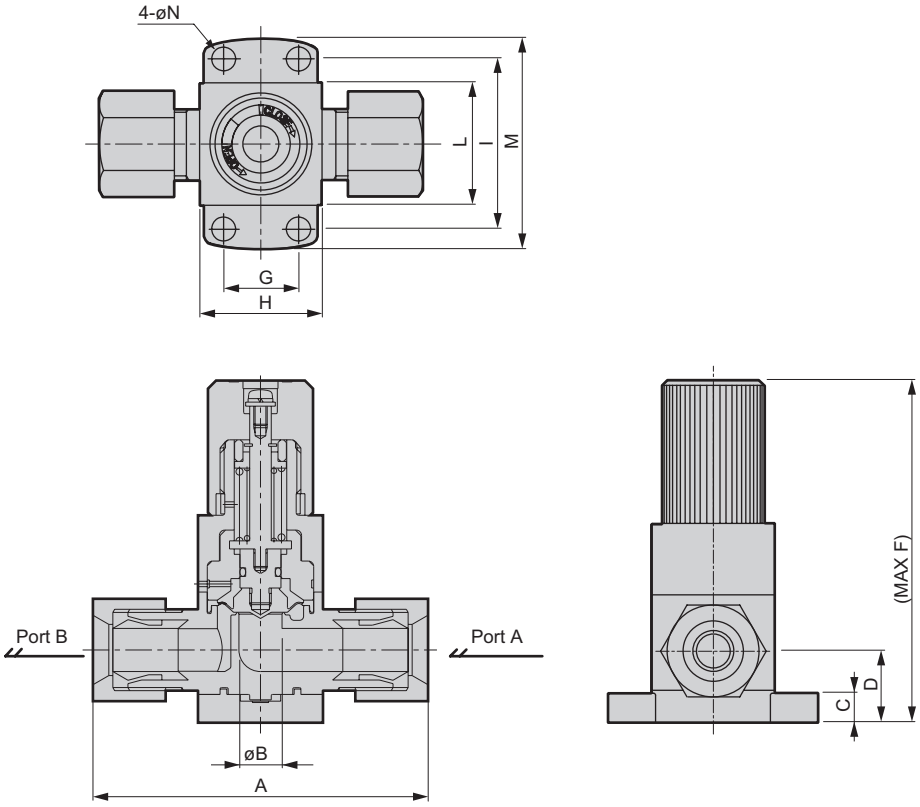

Model No.	C	D	F	G	H	I	L	M	N
MMD302	8.5	21	106	22	38	50	36	62	7
MMD402	9	27	134	28	47	64	46	82	9
MMD502	10	35	167	40	60	78	60	96	9

MMD3 (10mm)

*1 (Connector No.)	A	B
10US	86	8
10BUS	86	8
10UP	86	8
10BUP	86	8
10UA	78	8
10BUA	78	8
10UR	110	7.5
10BUR	114	6.4
10UK	96	7.5
10BUK	96	7.5
10BUW	97	6.3

MMD3 (12mm)

*1 (Connector No.)	A	B
12US	95	10
15BUS	95	10
12UP	94	10
15BUP	94	10
12UA	86	10
15BUA	86	10
12UR	110	9.5
15BUR	114	9.5
12UK	102	10
15BUK	102	10
15BUW	103	9.4

MMD4

*1 (Connector No.)	A	B
20BUS	124	16
20BUP	118	16
20BUA	108	16
20BUR	134	15.9
20BUK	119	16
20BUW	122	14.7

MMD5

*1 (Connector No.)	A	B
25US	147	20
25BUS	147	20
25UP	146	20
25BUP	146	20
25BUA	140	20
25UR	159	20
25BUR	162	20
25UK	141	20
25BUK	141	20
25BUW	156	20

Dimensions

●Bottom mounting

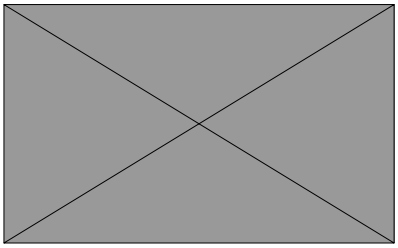

Model No.	O	P
MMD302	22±0.3	M6 depth 9
MMD402	28±0.3	M8 depth 10
MMD502	40±0.3	M8 depth 13

Stainless steel body manual valve for chemical liquids

MMD$^{3}_{4}_{5}$02 Series

Stainless steel body with stable seal structure

Ideal for explosion-proof environments such as solvents RoHS CAD

Specifications

Item	MMD302	MMD402	MMD502
Working fluid	Chemical liquids, pure water, air, N_2 gas (*1)		
Fluid temperature °C	5 to 90		
Proof pressure MPa	1.2		
Working pressure (A→B)MPa	0 to 0.4		
Working pressure (B→A)MPa	0 to 0.4		
Valve seat leakage cm^3/min	0 (water pressure)		
Back pressure MPa	0 to 0.4		
Ambient temperature°C	0 to 60		
Mounting orientation	Unrestricted		
Connection	Rc1/4, Rc3/8 ø3/8" SUS tube Double barbed fitting for ø3/8" (*2) ø1/2" SUS tube Double barbed fitting for ø1/2" (*2)	Rc1/2 ø3/4" SUS tube Double barbed fitting for ø3/4" (*2)	ø1" SUS tube Double barbed fitting for ø1" (*2)
Orifice size	ø8, ø10	ø16	ø20
Weight kg	0.45	0.88	1.3

*1: Check the compatibility of product structural materials, working fluids and atmosphere.
*2: For double barbed fitting, fluorine lubricant is applied to the sliding surface between the front ferrule and fitting body.
*3: MMD*02 Series cannot be used for flow rate adjustment. Use it either fully closed or fully opened.

Internal structure and parts list

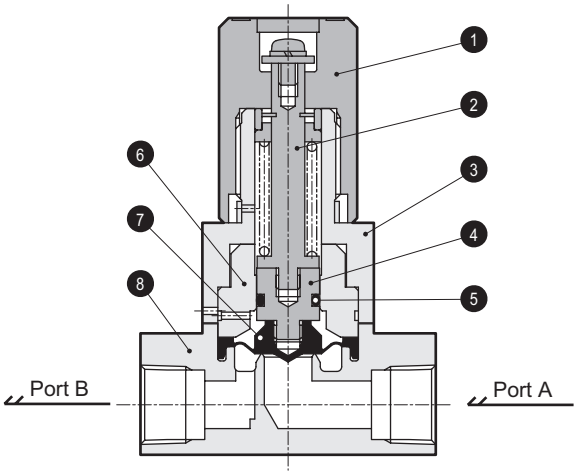

Part No.	Part name	Material (by actuator material)	
		P	A
1	Knob	PE	A5056
2	Shaft	SUS304	SUS304
3	Cover	PP	A5056
4	Rod	PP	
5	O-ring	EPDM	
6	Diaphragm holder	PP	A5056
7	Diaphragm	PTFE	
8	Body	SUS316L	

The material and structure may vary depending on the model number. Contact CKD for details.

⚠ Always read the precautions on Intro Pages 7 to 14 before use.

How to order

●MMD*02 Series

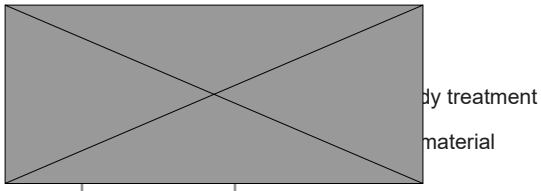

		MMD302						MMD402			MMD502	
❶ Connection		8	3BT	6S	10	4BT	8S	15	6BT	12S	8BT	16S
		Rc 1/4	3/8" ×t1.0 SUS tube	3/8"tube connection Double barbed fitting	Rc 3/8	1/2" ×t1.24 SUS tube	1/2"tube connection Double barbed fitting	Rc 1/2	3/4" ×t1.24 SUS tube	3/4"tube connection Double barbed fitting	1" × t1.65SUS tube	1"tube connection Double barbed fitting
Code	Orifice size / Description	ø8			ø10			ø16			ø20	
❷ Actuator material												
P	PP	●	●	●	●	●	●	●	●	●	●	●
A	A5056	●	●	●	●	●	●	●	●	●	●	●
❸ Body treatment												
Blank	None	●	●	●	●	●	●	●	●	●	●	●
E	With electrolytic polishing		●	●		●	●		●	●	●	●

Products that have electropolished bodies must be manufactured on a case-by-case basis.

Precautions for model No. selection

*Consult with CKD for connections other than the ones listed.
*Connection Rc is not compatible with electrolytic polishing specifications.

Dimensions

●Rc thread

・MMD302-8/10

・MMD402-15

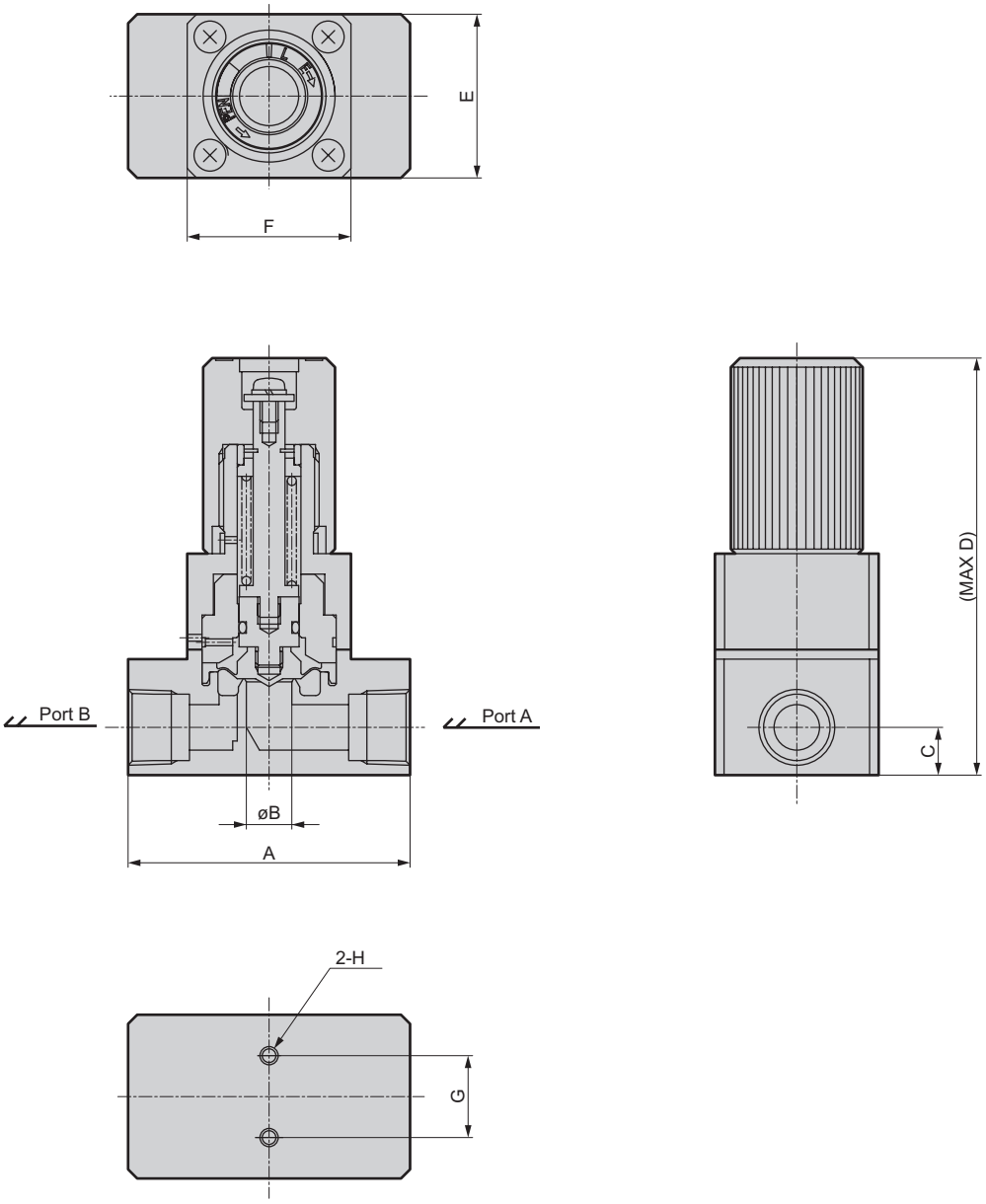

Model No.	A	B	C	D	E	F	G	H
MMD302-8	62	8	10.5	96	36	36	18±0.3	M4 depth 5
MMD302-10	62	10	10.5	96	36	36	18±0.3	M4 depth 5
MMD402-15	80	16	13.5	121	46	46	26±0.3	M5 depth 6

Dimensions

●SUS tube

・MMD302-3BT/4BT
・MMD402-6BT

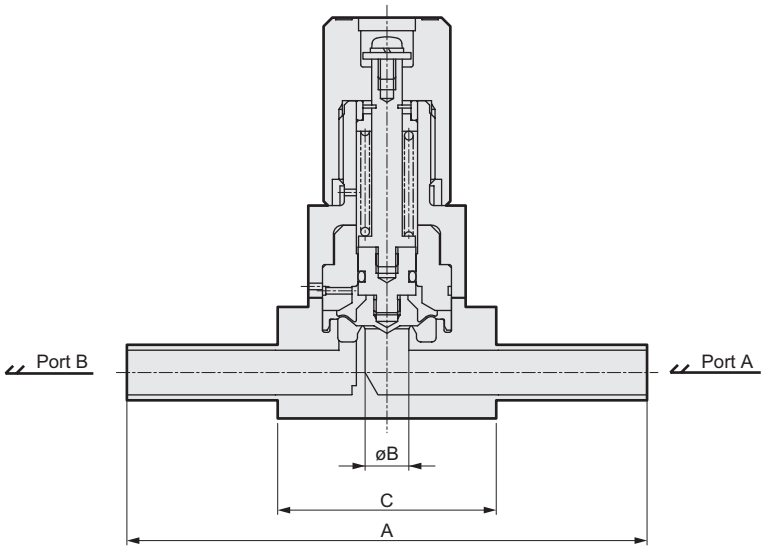

Model No.	A	B	C
MMD302-3BT	116	8	50
MMD302-4BT	116	10	50
MMD402-6BT	126	16	61

●Double barbed fitting

・MMD302-6S/8S
・MMD402-12S

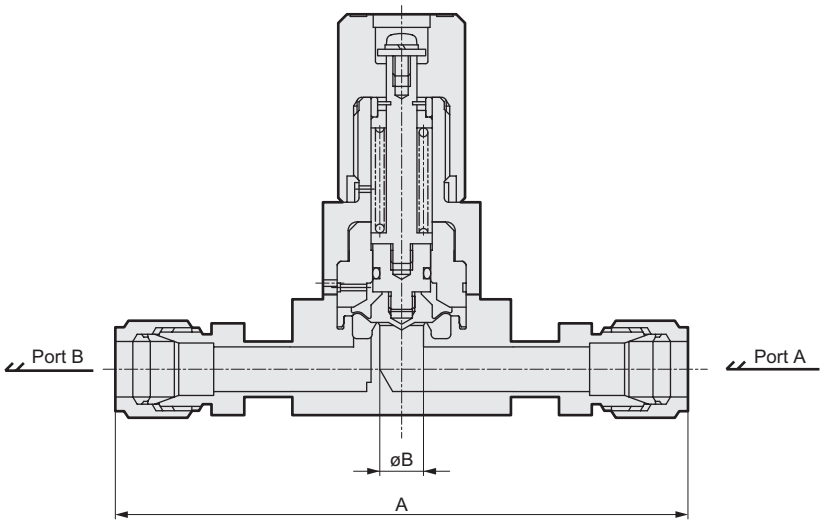

Model No.	A	B
MMD302-6S	116	8
MMD302-8S	130	10
MMD402-12S	150	16

Dimensions

●Double barbed fitting

・MMD502-16S

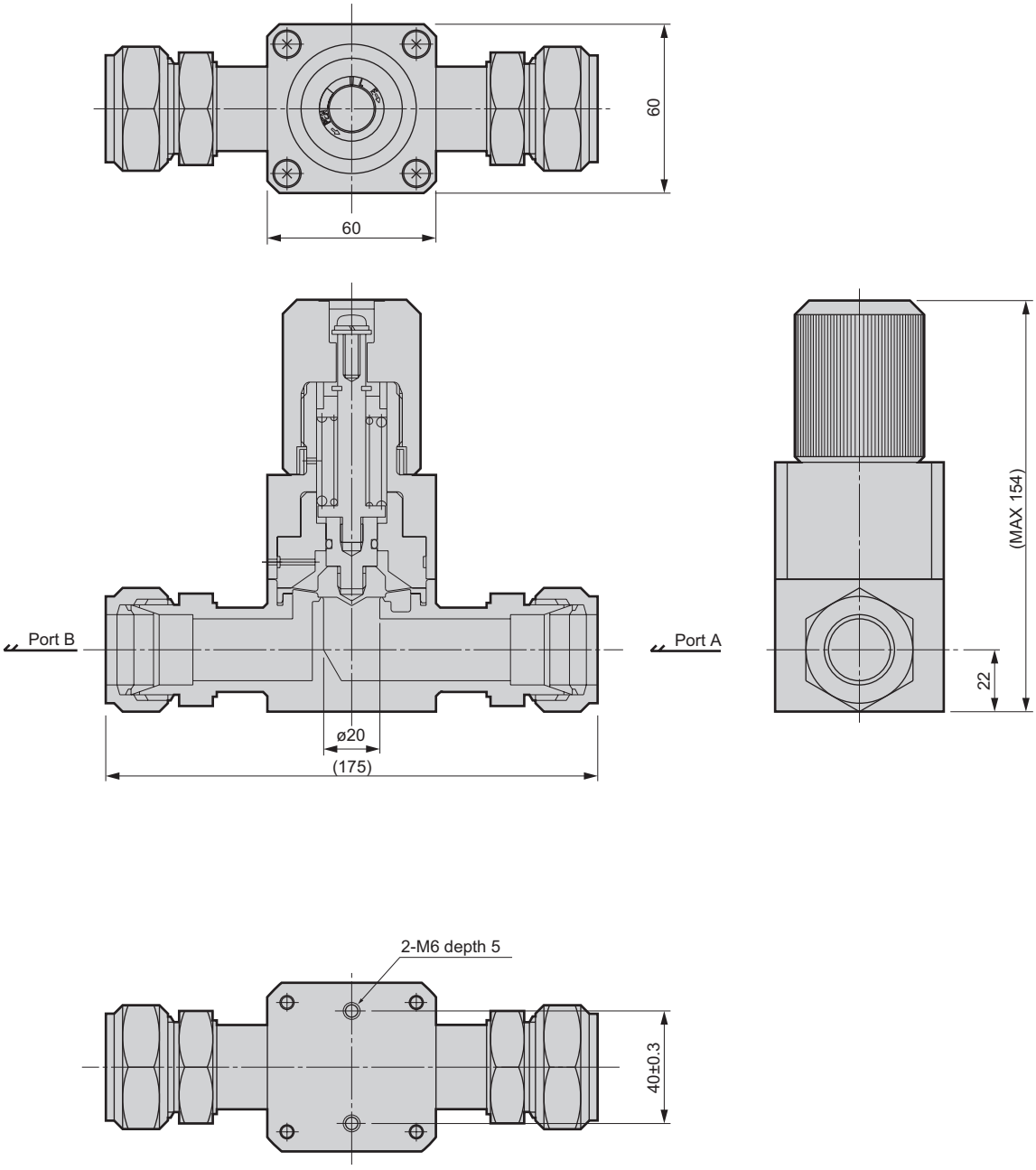

Dimensions

● SUS tube

・MMD502-8BT

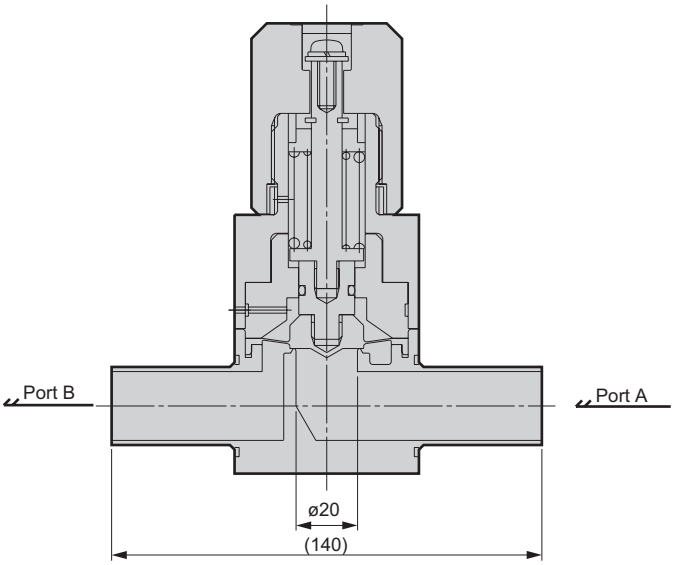

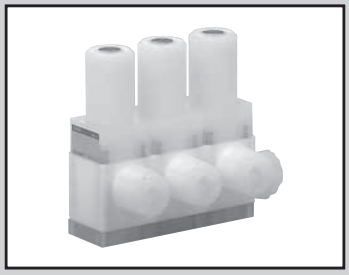

Manual valve for chemical liquids (manifold/branch valve)

GMMD$^{3}_{4}_{5}$02 Series

Manifold that uses a stable seal structure Ideal for saving space in the branch part of chemical liquids

RoHS

Export controlled items

*Eligibility: GMMD402, 502 (*5)

- ●Orifice size: ø6 to ø20
- ●Station No.: 1 to 5 stations
- ●Connection tube size: ø10, ø12, ø25, 3/8", 1/2", 1"

Specifications

Item		GMMD302	GMMD402	GMMD502
Working fluid		Chemical liquids, pure water, air, N_2 gas (*1)		
Fluid temperature °C		5 to 90 (*3)		
Proof pressure MPa		1.2		
Working pressure MPa		0 to 0.4		
Valve seat leakage cm^3/min		0 (water pressure)		
Back pressure MPa		0 to 0.4		
Ambient temperature °C		0 to 60		
Mounting orientation		Unrestricted		
Connection		O.D. ø10 tube connection (integrated fitting) O.D. ø12 tube connection (integrated fitting) O.D. 3/8" tube connection (integrated fitting) O.D. 1/2" tube connection (integrated fitting)	O.D. 3/4" tube connection (Integrated fitting)	O.D. ø25 tube connection (integrated fitting) O.D. 1" tube connection (integrated fitting)
Orifice size		ø6 to ø10 (*2)	ø14.7 to ø16 (*2)	ø20
Weight kg	1 station	0.25	0.50	1.1
	2 stations	0.51	1.0	2.2
	3 stations	0.76	1.5	3.3
	4 stations	1.0	2.0	4.4
	5 stations	1.3	2.5	—

*1: Check the compatibility of product structural materials, working fluids and atmosphere.
*2: Check the orifice size of each connection in How to order.
*3: For use with hydrofluoric acid, or when the fluid temperature exceeds 40°C, consult with CKD.
*4: MMD*02 Series cannot be used for flow rate adjustment. Use it either fully closed or fully opened.
*5: GMMD302 is not applicable. (when piping individual secondary side ports)

⚠ Always read the precautions on Intro Pages 7 to 14 before use.

Internal structure and parts list

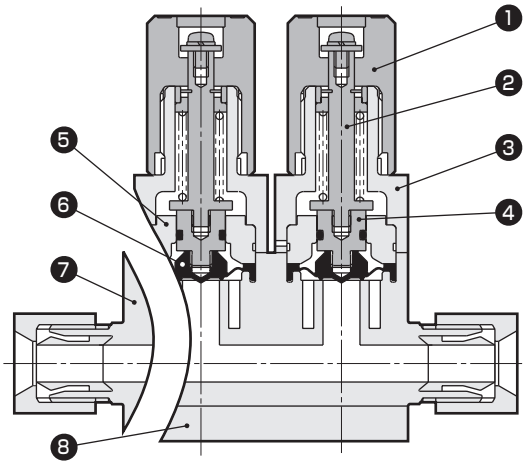

Part No.	Part name	Material (by fluid code)
		U
1	Knob	PE
2	Shaft	SUS304 (with fluoro resin coating)
3	Cover	PP
4	Rod	PP
5	Diaphragm holder	PP
6	Diaphragm	PTFE
7	Body	PTFE
8	Mounting plate	PP

How to order

●GMMD3 Series (connection: ø10, 3/8" tube connection)

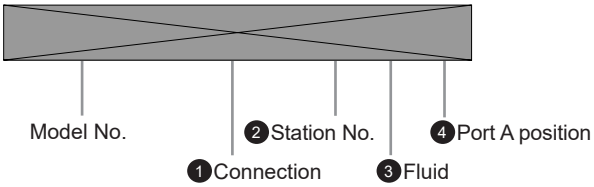

		❶ Connection										
		10US	10BUS	10UP	10BUP	10UA	10BUA	10UR	10BUR	10UK	10BUK	10BUW
		Super Type Pillar fitting Integrated		Super 300 Pillar fitting P series integrated		F-LOCK 20A Series Integrated fitting		F-LOCK 60 Series Integrated fitting		Final Lock Fitting Integrated		Flaretek Fitting Integrated
		ø10 x ø8 tube connection	3/8" x 1/4" tube connection	ø10 x ø8 tube connection	3/8" x 1/4" tube connection	ø10 x ø8 tube connection	3/8" x 1/4" tube connection	ø10 x ø8 tube connection	3/8" x 1/4" tube connection	ø10 x ø8 tube connection	3/8" x 1/4" tube connection	3/8" x 1/4" tube connection
Code	Orifice size / Description	ø8						ø7	ø6	ø8		ø6.3
Body material		PTFE machined body										
❷ Station No.												
1 to 5	1 station to 5 stations	●	●	●	●	●	●	●	●	●	●	●
❸ Fluid												
U	Standard	●	●	●	●	●	●	●	●	●	●	●
❹ Port A position												
Blank	Right	●	●	●	●	●	●	●	●	●	●	●
L	Left	●	●	●	●	●	●	●	●	●	●	●
W	Both sides	●	●	●	●	●	●	●	●	●	●	●

* Machined PTFE products will be manufactured on a per-order basis.

How to order

●GMMD3 Series (connection: ø12, 1/2" tube connection)

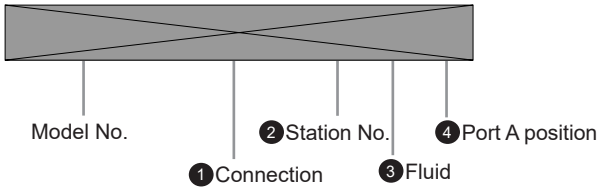

		❶ Connection										
		12US	15BUS	12UP	15BUP	12UA	15BUA	12UR	15BUR	12UK	15BUK	15BUW
		Super Type Pillar fitting Integrated		Super 300 Pillar fitting P series integrated		F-LOCK 20A Series Integrated fitting		F-LOCK 60 Series Integrated fitting		Final Lock Fitting Integrated		Flaretek Fitting Integrated
		ø12 x ø10 tube connection	1/2" x 3/8" tube connection	ø12 x ø10 tube connection	1/2" x 3/8" tube connection	ø12 x ø10 tube connection	1/2" x 3/8" tube connection	ø12 x ø10 tube connection	1/2" x 3/8" tube connection	ø12 x ø10 tube connection	1/2" x 3/8" tube connection	1/2" x 3/8" tube connection
Code	Orifice size / Description	ø10						ø9.5		ø10		ø9.4
Body material		PTFE machined body										
❷ Station No.												
1 to 5	1 station to 5 stations	●	●	●	●	●	●	●	●	●	●	●
❸ Fluid												
U	Standard	●	●	●	●	●	●	●	●	●	●	●
❹ Port A position												
Blank	Right	●	●	●	●	●	●	●	●	●	●	●
L	Left	●	●	●	●	●	●	●	●	●	●	●
W	Both sides	●	●	●	●	●	●	●	●	●	●	●

* Machined PTFE products will be manufactured on a per-order basis.

How to order

●GMMD4 Series

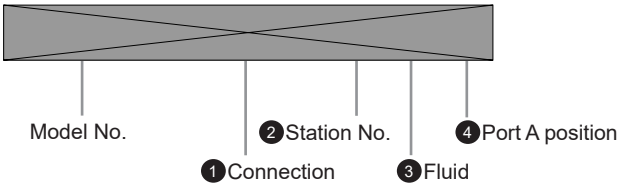

		❶ Connection					
		20BUS	20BUP	20BUA	20BUR	20BUK	20BUW
		Super-type pillar integrated fitting	Super 300 type Pillar fitting P Series integrated	F-LOCK20 A Series Integrated fitting	F-LOCK60 Series Integrated fitting	Final Lock Integrated fitting	Flaretek Integrated fitting
		3/4" x 5/8" tube connection					
Code	Orifice size / Description	ø16			ø15.9	ø16	ø14.7
Body material		PTFE machined body					
❷ Station No.							
1 to 5	1 station to 5 stations	●	●	●	●	●	●
❸ Fluid							
U	Standard	●	●	●	●	●	●
❹ Port A position							
Blank	Right	●	●	●	●	●	●
L	Left	●	●	●	●	●	●
W	Both sides	●	●	●	●	●	●

* Machined PTFE products will be manufactured on a per-order basis.

How to order

●GMMD5 Series

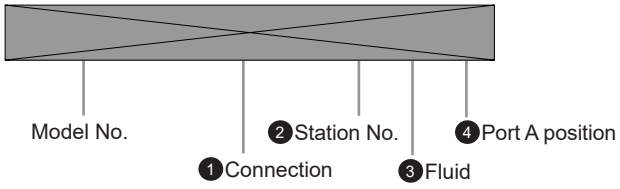

Code	Description \ Orifice size	❶ Connection									
		25US	25BUS	25UP	25BUP	25BUA	25UR	25BUR	25UK	25BUK	25BUW
		Super Type Pillar fitting Integrated		Super 300 Pillar fitting P series integrated		F-LOCK 20A Series Fitting Integrated	F-LOCK 60 Series Integrated fitting		Final Lock Fitting Integrated		Flaretek Fitting Integrated
		ø25 × ø22 tube connection	1" x 7/8" tube connection	ø25 × ø22 tube connection	1" x 7/8" tube connection	1" × 7/8" tube connection (*1)	ø25 × ø22 tube connection	1" x 7/8" tube connection	ø25 × ø22 tube connection	1" x 7/8" tube connection	1" x 7/8" tube connection
	Orifice size	ø20									
	Body material	PTFE machined body									
❷ Station No.											
1 to 4	1 station to 4 stations	●	●	●	●	●	●	●	●	●	●
❸ Fluid											
U	Standard	●	●	●	●	●	●	●	●	●	●
❹ Port A position											
Blank	Right	●	●	●	●	●	●	●	●	●	●
L	Left	●	●	●	●	●	●	●	●	●	●
W	Both sides	●	●	●	●	●	●	●	●	●	●

* Machined PTFE products will be manufactured on a per-order basis.

⚠ Precautions for model No. selection

*1: Can also be used for ø25 x ø22 tube connection.

Dimensions

●Integrated fitting

- GMMD302- *1
- GMMD402- *1
- GMMD502- *1

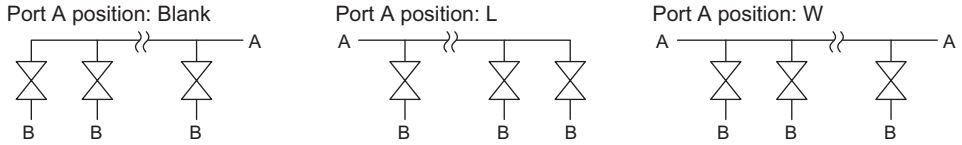

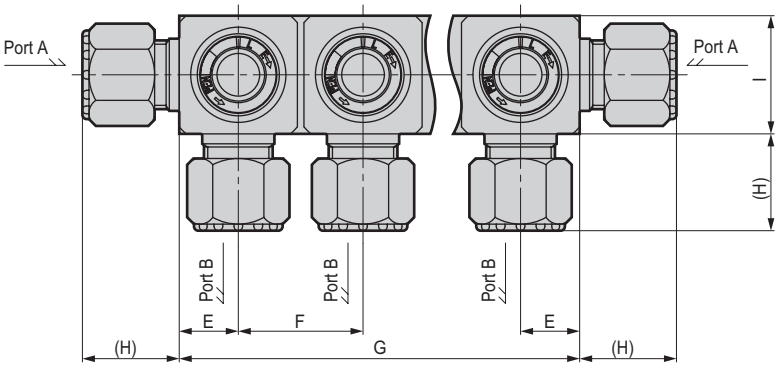

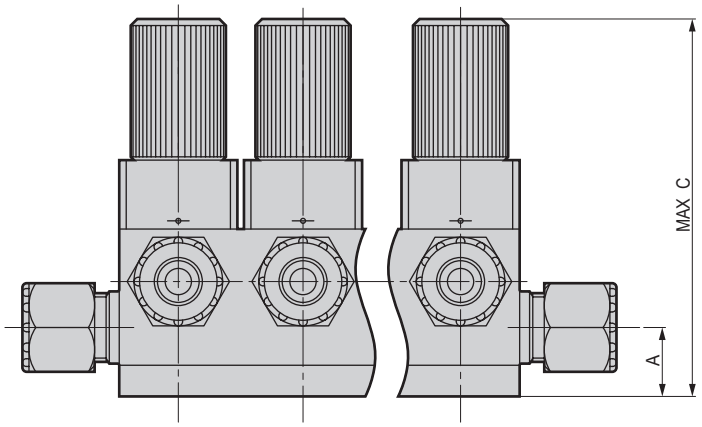

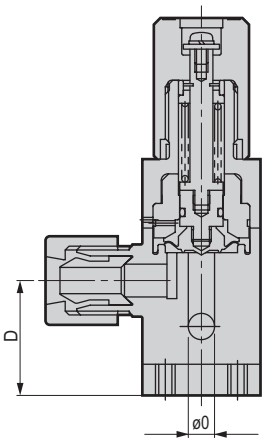

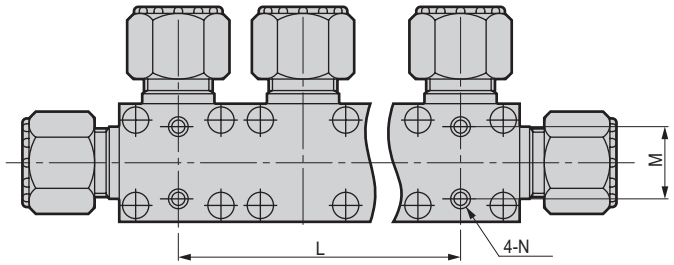

Dimensions

Station No.	Model No.	A	C	D	E	F	G	I	L	M	N
1	GMMD302	21	120	35	18	38	36	36	-	22±0.3	M6 depth 9
	GMMD402	27	153	46	23	48	46	46	-	28±0.3	M8 depth 10
	GMMD502	35	192	60	30	62	60	60	-	40±0.3	M8 depth 13
2	GMMD302	21	120	35	18	38	74	36	38±0.3	22±0.3	M6 depth 9
	GMMD402	27	153	46	23	48	94	46	48±0.4	28±0.3	M8 depth 10
	GMMD502	35	192	60	30	62	122	60	62±0.4	40±0.3	M8 depth 13
3	GMMD302	21	120	35	18	38	112	36	76±0.4	22±0.3	M6 depth 9
	GMMD402	27	153	46	23	48	142	46	96±0.5	28±0.3	M8 depth 10
	GMMD502	35	192	60	30	62	184	60	124±0.5	40±0.3	M8 depth 13
4	GMMD302	21	120	35	18	38	150	36	114±0.5	22±0.3	M6 depth 9
	GMMD402	27	153	46	23	48	190	46	144±0.5	28±0.3	M8 depth 10
	GMMD502	35	192	60	30	62	246	60	186±0.7	40±0.3	M8 depth 13
5	GMMD302	21	120	35	18	38	188	36	152±0.7	22±0.3	M6 depth 9
	GMMD402	27	153	46	23	48	238	46	192±0.7	28±0.3	M8 depth 10

GMMD302 (10mm)

*1 (Connector No.)	H	O
10US	25	8
10BUS	25	8
10UP	25	8
10BUP	25	8
10UA	21	8
10BUA	21	8
10UR	37	7
10BUR	39	6
10UK	30	8
10BUK	30	8
10BUW	31	6.3

GMMD302 (12mm)

*1 (Connector No.)	H	O
12US	29.5	10
15BUS	29.5	10
12UP	29	10
15BUP	29	10
12UA	25	10
15BUA	25	10
12UR	37	9.5
15BUR	39	9.5
12UK	33	10
15BUK	33	10
15BUW	33.5	9.4

GMMD402

*1 (Connector No.)	H	O
20BUS	39	16
20BUP	36	16
20BUA	31	16
20BUR	44	15.9
20BUK	36.5	16
20BUW	38	14.7

GMMD502

*1 (Connector No.)	H	O
25US	43.5	20
25BUS	43.5	20
25UP	43	20
25BUP	43	20
25BUA	40	20
25UR	49.5	20
25BUR	51	20
25UK	40.5	20
25BUK	40.5	20
25BUW	48	20

Manual valve for high pressure chemical liquid

MMD*0H Series

For chemical liquid lines in semiconductor manufacturing lines
A valve designed to support high pressure and high back pressure.

●Tube connection: 1/2", 1", 1.25"
PFA pipe: Nominal 1/4", 1/2", 3/4", 1"

RoHS CAD

Export controlled items

*Eligibility: MMD40H (*4), MMD50H, 60H

Specifications

Item	MMD40H		MMD50H	MMD60H
Working fluid	Chemical liquids, pure water, air, N_2 gas (*1)			
Fluid temperature °C	5 to 40			
Proof pressure MPa	1.4			
Working pressure (A→B)MPa	0 to 0.7			
Valve seat leakage cm^3/min	0 (water pressure)			
Back pressure MPa	0 to 0.7			
Ambient temperature°C	0 to 40			
Mounting orientation	Unrestricted			
Connection	O.D. 1/2" tube connection Nominal 1/4" PFA pipe for welding	O.D. 3/4" tube connection Nominal 1/2" PFA pipe for welding	O.D. 1" tube connection Nominal 3/4" PFA pipe for welding	O.D. 1.25" tube connection Nominal 1" PFA pipe for welding
Orifice size	ø10	ø16	ø22	ø25
Cv value	2	5 (*2)	9.5	14
Weight kg	0.59		1.1	2.0

*1: Check the compatibility of product structural materials, working fluids and atmosphere.
*2: The Flaretek fitting has Cv of 4.5.
*3: MMD*0H Series cannot be used for flow rate adjustment. Use it either fully closed or fully opened.
*4: 0D1/2" tube connection, excluding nominal 1/4" PFA pipe for welding.

⚠ Always read the precautions on Intro Pages 7 to 14 before use.

Internal structure and parts list

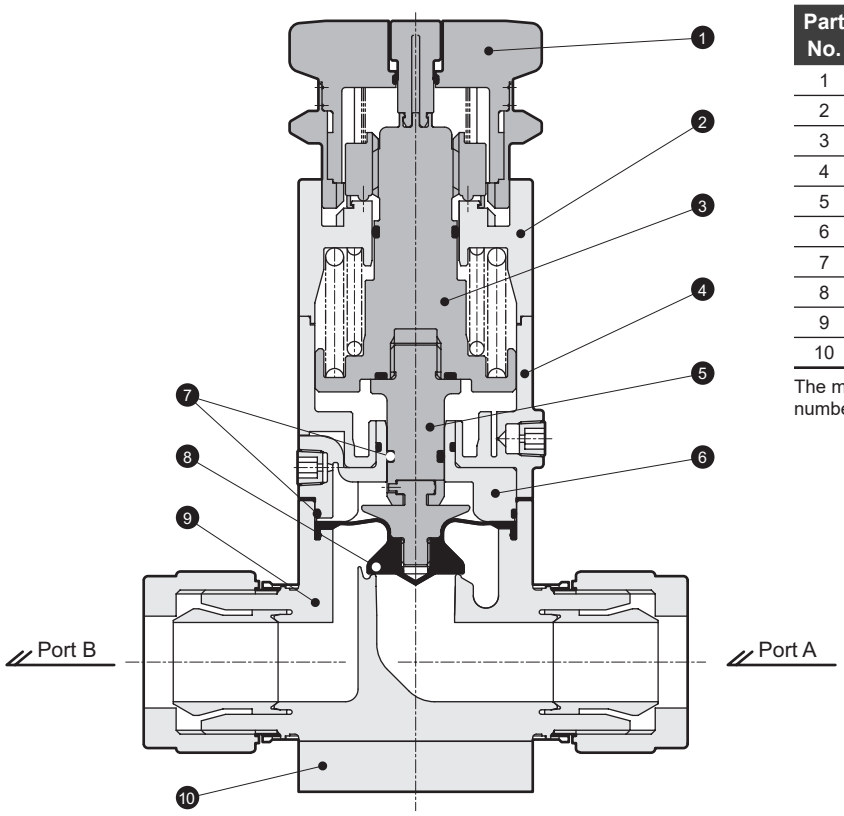

Part No.	Part name	Material (by fluid code)	
		Standard	M
1	Knob	PP	
2	Cover	PP	
3	Shaft	PP	
4	Cylinder	PP	
5	Rod	PP	
6	Diaphragm holder	PP	
7	O-ring	FKM	EPDM
8	Diaphragm	PTFE	
9	Body	PFA	
10	Mounting plate	PP	

The material and structure may vary depending on the model number. Contact CKD for details.

Manual valve operation method

● OPEN
Confirm that the lock ring has slid to the upper limit. (↑ (1))
When turning the knob in the OPEN direction, the first few turns will be idle.
When idling, the slide nut moves downward while rotating, comes to the position shown in the figure and stops moving downward. (↓ (2))
If turned further, the knob will rotate and raise the shaft with the thrust of the rotation, and the valve will open. (↑ (3) Indicator rises.)

● CLOSE
Confirm that the lock ring has slid to the upper limit. (↑ (1))
Turning the knob clockwise will close the valve.
(Indicator falls.)
When turning the knob further in the CLOSE direction while the valve is closed (indicator lowered position), it will idle.
→ This prevents overtightening.
Even when it is idling, the fluid can be stopped as the valve closing spring is activated.

In the idling state, the slide nut and shaft screw will rotate to the point where they are disengaged, but the slide nut is constantly pushed by the spring, so turning the screw in the OPEN direction once more will cause the screws to engage again.

● Knob lock
After operating the knob, you can slide the lock ring to the lower limit and lock the lock ring so that the knob does not turn.
→ This can prevent misoperation.

● Do not operate while applying lateral force to the knob. Do not forcibly turn the knob after the valve OPEN and after the knob is locked. There is a risk of part damage.

Knob top display

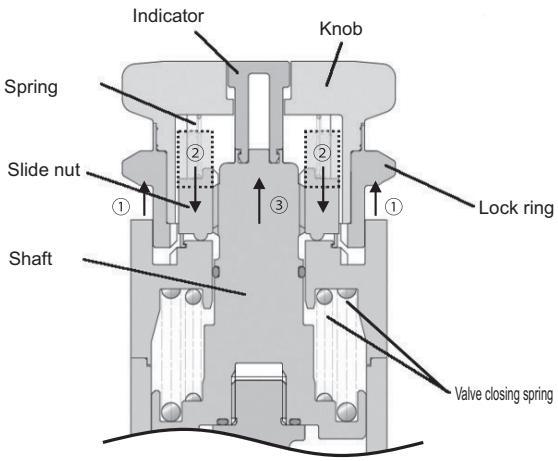

How to order

●MMD*0H Series

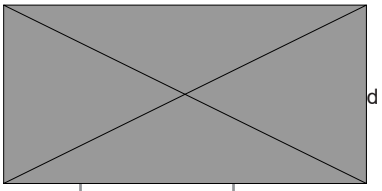

		MMD40H						MMD50H			MMD60H	
❶ Connection		4BJ	6BJ	4BW	6BW	2W	4W	8BJ	8BW	6W	10BJ	8W
		Super 300 Pillar fitting P series integrated		Flaretek Fitting Integrated		For welding PFA pipe		Super 300 Pillar fitting P series integrated	Flaretek Fitting Integrated	For welding PFA pipe	Super 300 Pillar fitting P series integrated	For welding PFA pipe
		1/2" x 3/8" tube connection	3/4" x 5/8" tube connection	1/2" x 3/8" tube connection	3/4" x 5/8" tube connection	Nominal 1/4" PFA pipe for welding	Nominal 1/2" PFA pipe for welding	1" x 7/8" tube connection	1" x 7/8" tube connection	Nominal 3/4" PFA pipe for welding	1" 1/4× 1" 1/10 Tube connection	Nominal 1" PFA pipe for welding
Code	Orifice size / Description	ø10	ø16	ø10	ø16	ø10	ø16	ø22			ø25	
Body material		PFA molded body										
❷ Fluid												
Blank	Standard	●	●	●	●	●	●	●	●	●	●	●
M	For ammonia (Note)	●	●	●	●	●	●	●	●	●	●	●

Precautions for model No. selection

Note: Available as made to order

Dimensions

●Integrated fitting

・MMD $^{4}_{5}_{6}$ 0H-*BJ
*BW

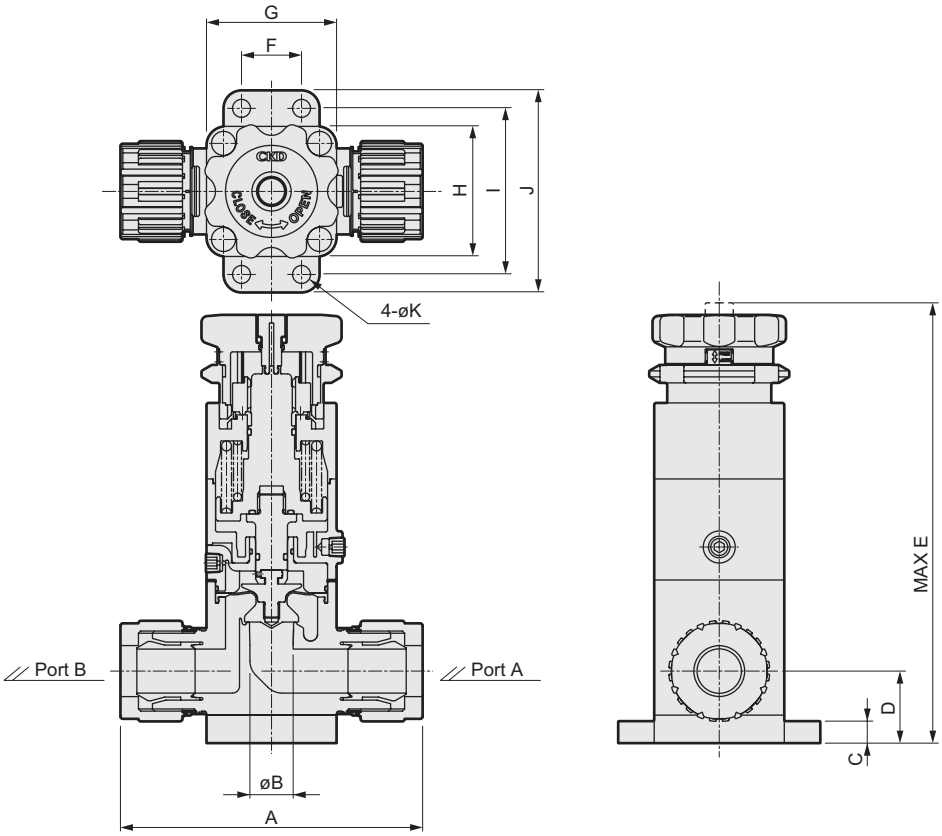

●Pipe for welding

・MMD $^{4}_{5}_{6}$ 0H-*W

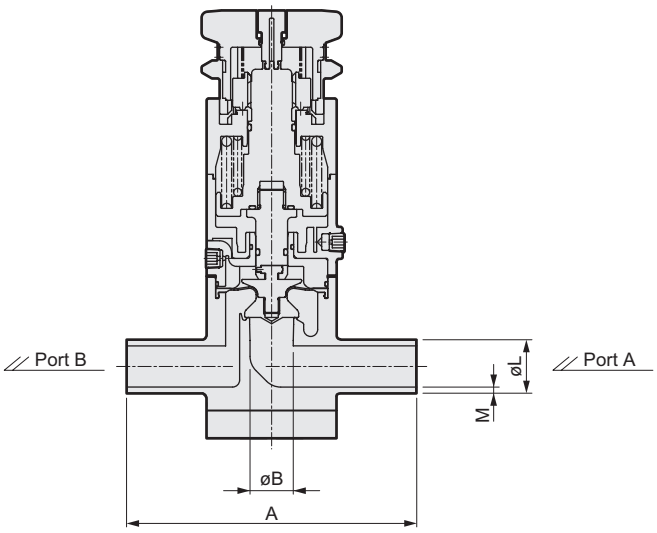

Model No.	Connector No.	A	B	C	D	E	F	G	H	I	J	K	L	M
MMD40H	4BJ	108	10	10	31	183	20	50	50	68	86	9	-	-
	4BW	117	10	10	31	183	20	50	50	68	86	9	-	-
	2W	110	10	10	31	183	20	50	50	68	86	9	13.7	2.3
	6BJ	122	16	10	31	183	20	50	50	68	86	9	-	-
	6BW	126	16	10	31	183	20	50	50	68	86	9	-	-
	4W	130	16	10	31	183	20	50	50	68	86	9	21.3	2.8
MMD50H	8BJ	151	22	11	36	220	30	65	65	83	101	9	-	-
	8BW	161	22	11	36	220	30	65	65	83	101	9	-	-
	6W	145	22	11	36	220	30	65	65	83	101	9	26.7	2.9
MMD60H	10BJ	198	25	12	42	241	38	75	75	93	111	9	-	-
	8W	155	25	12	42	241	38	75	75	93	111	9	33.4	3.4

Manual valve for chemical liquids, metal-free

MMD*0M Series

A valve designed to support strong acid (hydrochloric acid, hydrofluoric acid) lines in semiconductor manufacturing.

● Connection tube size: ø10, ø12, ø25, 3/8″, 1/2″, 3/4″, 1"

RoHS CAD

Export controlled items

*Eligibility: MMD50M

Specifications

Item	MMD30M		MMD50M	
Working fluid	Chemical liquids, pure water, air, N_2 gas (*1)			
Fluid temperature °C	5 to 40			
Proof pressure MPa	1.0			
Working pressure (A→B) MPa	0 to 0.5			
Valve seat leakage cm^3/min	0 (water pressure)			
Back pressure MPa	0 to 0.5			
Ambient temperature °C	0 to 40			
Mounting orientation	Unrestricted			
Connection	O.D. ø3/8" tube connection O.D. ø10 tube connection	O.D. ø1/2" tube connection O.D. ø12 tube connection	O.D. ø3/4" tube connection	O.D. ø1" tube connection O.D. ø25 tube connection
Orifice size	ø8	ø10	ø16	ø22
Cv value	1.25	1.8	5.5	9.5
Weight kg	0.28		1.1	

*1: Check the compatibility of product structural materials, working fluids and atmosphere.

Always read the precautions on Intro Pages 7 to 14 before use.

Internal structure and parts list

MMD30M

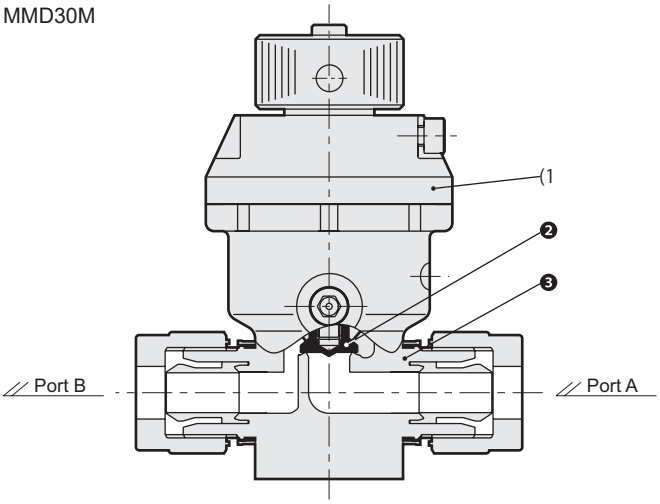

Part No.	Part name	Material
1	Actuator	PP, etc.
2	Diaphragm	PTFE
3	Body	PFA

MMD50M

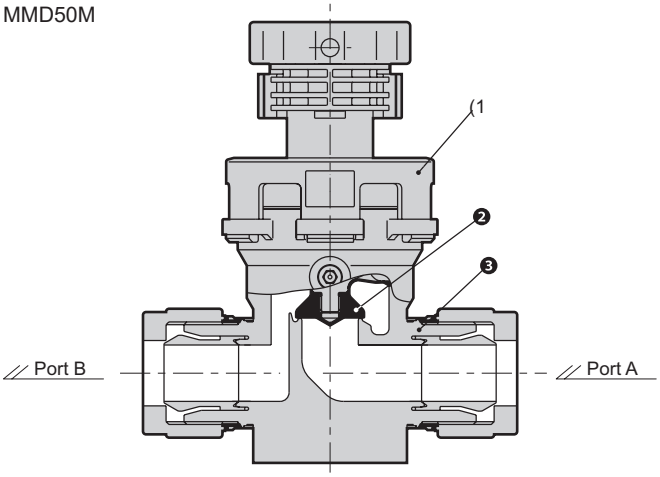

Part No.	Part name	Material
1	Actuator	PVDF and others
2	Diaphragm	PTFE
3	Body	PFA

How to order

● MMD*0M Series

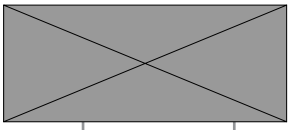

Model No.

❶Connection

	MMD30M				MMD50M		
❶ Connection	3BJ	10J	4BJ	12J	6BJ	8BJ	25J
	Super 300 Pillar fitting P series integrated						
	3/8" x 1/4" tube connection	ø10 x ø8 tube connection	1/2" x 3/8" tube connection	ø12 x ø10 tube connection	3/4" x 5/8" tube connection	1" x 7/8" tube connection	ø25 × ø22 tube connection

Description \ Orifice size	ø8	ø10	ø16	ø22
Cv	1.25	1.8	5.5	9.5

Dimensions

●MMD30M- *1

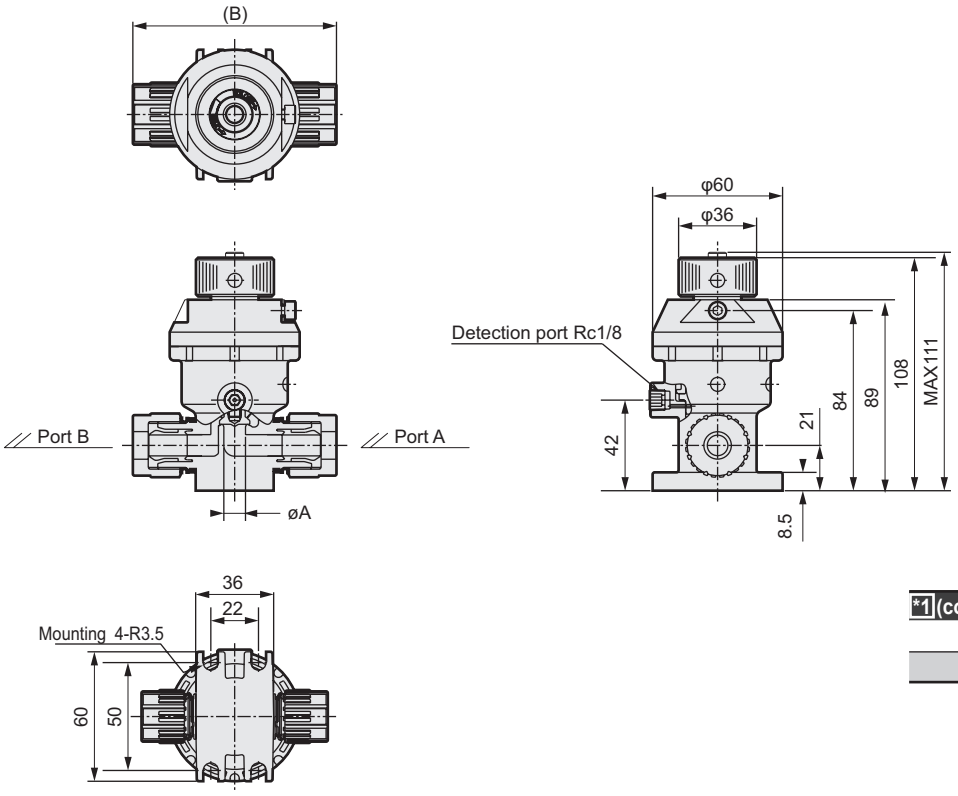

*1 (connector No.)	øA	B
3BJ	8	86
4BJ	10	94

●MMD50M- *1

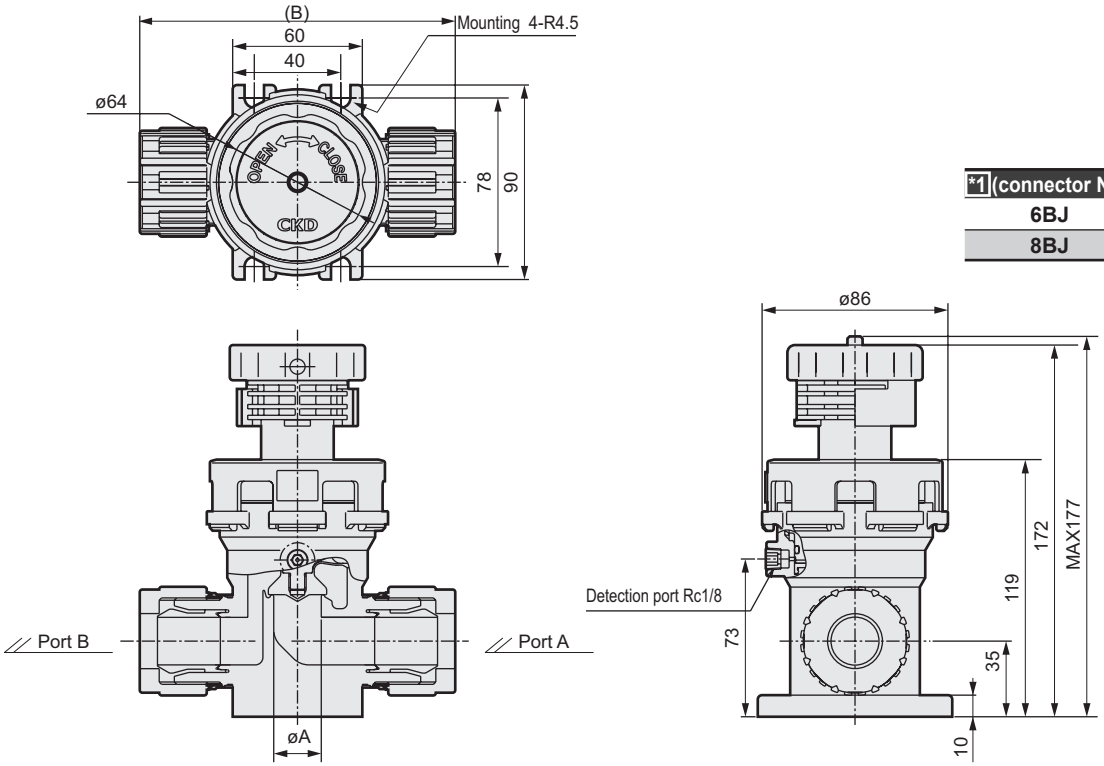

*1 (connector No.)	øA	B
6BJ	16	132
8BJ	22	146

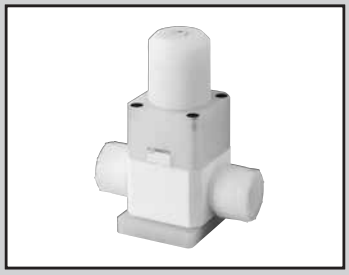

Large bore size Manual valve for chemical liquids

LYX Series

Large bore size PFA tube 1.5" compatible

RoHS

Export controlled items

Specifications

Item		LYX-1381
Working fluid		Chemical liquids, pure water, air, N_2 gas (*1)
Fluid temperature °C		10 to 35
Proof pressure MPa		0.8
Working pressure (A→B) MPa		0 to 0.4
Working pressure (B→A) MPa		0 to 0.4
Valve seat leakage cm^3/min		0 (water pressure)
Back pressure MPa		0 to 0.4
Ambient temperature °C		5 to 35
Mounting orientation		Unrestricted
Connection		OD1, 1/2" Super 300 Pillar fitting P Series $1^1/_2$" × $1^{21}/_{64}$" tube connection
Orifice size		ø40
Cv value		24
Operating section	Operating pressure MPa	0.5 to 0.6
	Operating port	Rc1/8
Weight kg		5.3

*1: Check the compatibility of product structural materials, working fluids and atmosphere.

How to order

LYX - 1381 - 12BJ - M

Model No.

❶ Fluid

Code	Description
❶ **Fluid**	
Blank	Standard
M	For ammonia

Internal structure and parts list

●LYX-1381

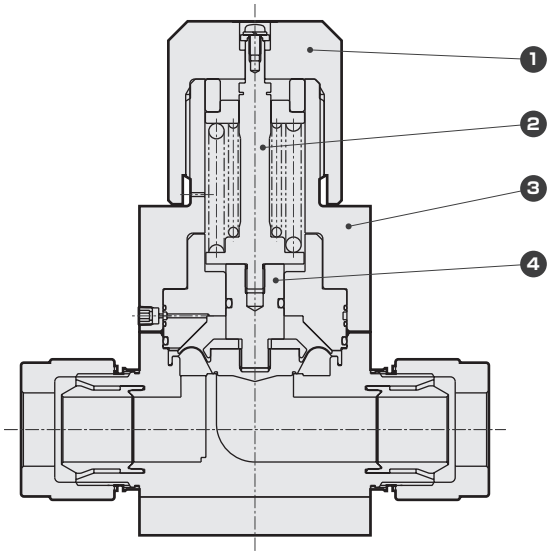

Part No.	Part name	Material (by fluid code)	
		Standard	M
1	Knob	PE	
2	Shaft	SUS304 (with fluoro resin coating)	
3	Cover	PP	
4	Rod	PP	

The material and structure may vary depending on the model number. Contact CKD for details.

⚠ Always read the precautions on Intro Pages 7 to 14 before use.

Dimensions

● Manual valve

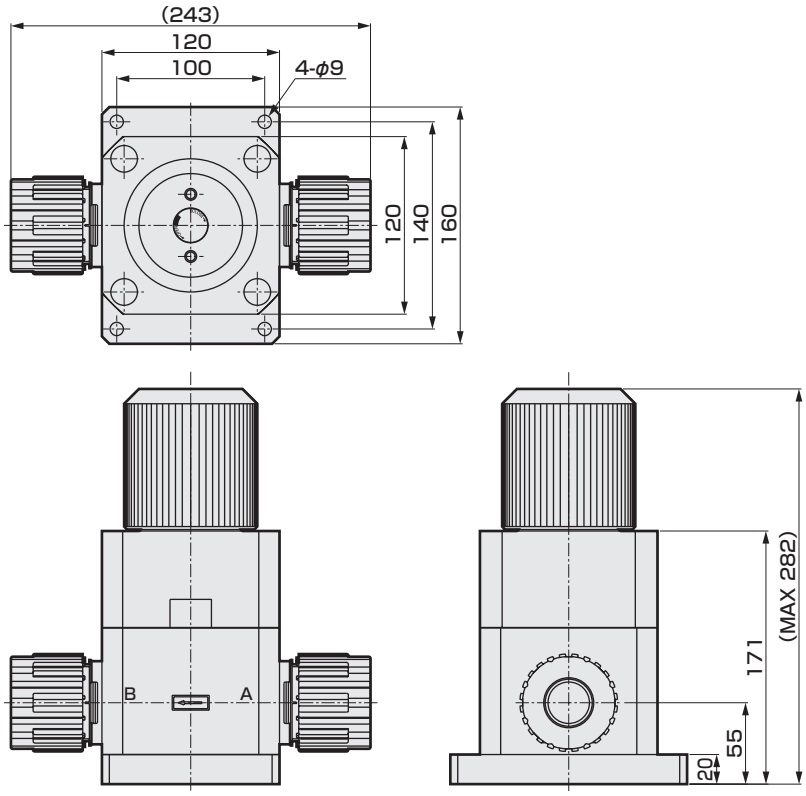

MEMO

Drip prevention valve

Overview

A valve that draws the liquid level at the tip of the nozzle into the pipe after closing the flow path in order to prevent the fluid from dripping down from the tip of the nozzle when the flow path is closed. A Drip prevention valve single unit and an integrated air operated valve for chemical liquids are available.

Safety precautions	Intro Page 9
Single unit	
AMS	150
Air operated integrated	
AMDS	154

Drip prevention valve for chemical liquids

AMSZ2/AMS022 Series

Drippings can be prevented
Drip prevention valve for nozzle tip control
●Maximum drip prevention amount: 0.04cm^3/0.12cm^3
●Connection tube size: ø3, ø6, ø6.35, 1/8”, 1/4”, Rc1/8

RoHS CAD

Specifications

Item			AMSZ2-*	AMS022-*
Working fluid			Chemical liquid, pure water (*1)	
Fluid temperature		°C	5 to 80	
Proof pressure		MPa	1.0	
Working pressure		MPa	0 to 0.2	
Ambient temperature		°C	0 to 60	
Mounting orientation			Horizontally mounted with port positioned vertically (port on OUT side up)	
Connection			Rc1/8 O.D. ø3 tube connection O.D. 1/8" tube connection	Rc1/8 O.D. ø6 tube connection O.D. 1/4” tube connection
Operating section	Operating pressure	MPa	0.3 to 0.5	
	Operating port		M5	
Maximum drip prevention amount cm^3			0.04	0.12
Weight		kg	0.08	0.13

*1: Cannot be used with acidic fluids. Contact CKD regarding acidic fluids and aqueous ammonia.
Check the compatibility of product structural materials, working fluids and atmosphere.

Examples of use and related products

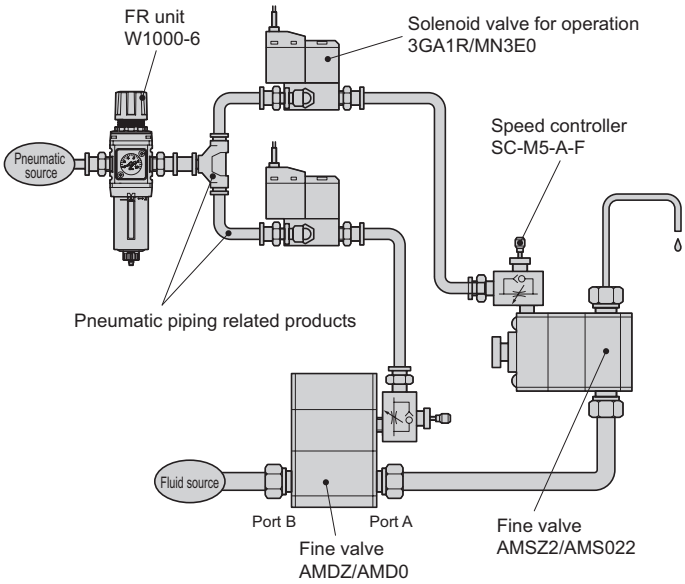

For related products, refer to the CKD website (https://www.ckd.co.jp/kiki/en/).

Internal structure and parts list

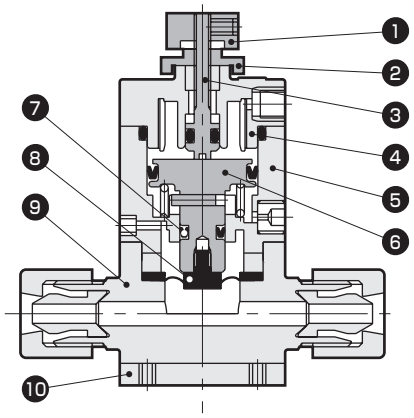

Part No.	Part name	Material (by body material)	
		Standard	D
1	Knob	SUS303	
2	Lock nut	SUS303	
3	Adjusting rod	SUS303	
4	Cover	PPS	
5	Cylinder	PPS	
6	Piston rod	SUS303	
7	Y packing	NBR	
8	Diaphragm	PTFE	
9	Body	PFA, PTFE	SUS316
10	Mounting plate	SUS304	—

The material and structure may vary depending on the model number. Contact CKD for details.

⚠ Always read the precautions on Intro Pages 7 to 14 before use.

How to order

●AMSZ Series

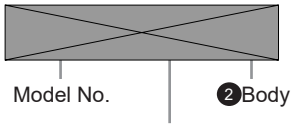

Code	Description	❶ Connection							
		6	3US	6BUS	3UP	6BUP	3UF	3UR	6BUR
		Rc 1/8	Super Type Pillar fitting Integrated		Super 300 Pillar fitting P series integrated		F-LOCK 20 Series Integrated fitting	F-LOCK 60 Series Integrated fitting	
			ø3 x ø2 tube connection	1.8" x 0.086" tube connection	ø3 x ø2 tube connection	1.8" x 0.086" tube connection	ø3 x ø2 tube connection	ø3 x ø2 tube connection	1/8" ×1/16" tube connection
❷ Body material									
Blank	PFA molded body or PTFE machined body	PTFE	PFA				PTFE	PTFE	
D	Stainless steel body	●							

* Machined PTFE products will be manufactured on a per-order basis.

●AMS0 Series

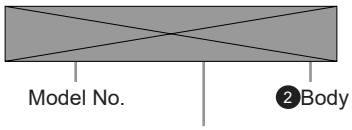

Code	Description	❶ Connection											
		6	6US	8BUS	6UP	8BUP	6UF	8BUF	6UR	8BUR	6UK	8BUK	8BUW
		Rc 1/8	Super Type Pillar fitting Integrated		Super 300 Pillar fitting P series integrated		F-LOCK 20 Series Integrated fitting		F-LOCK 60 Series Integrated fitting		Final Lock Fitting Integrated		Flaretek Fitting Integrated
			ø6 x ø4 tube connection	1/4" ×5/32" tube connection	ø6 x ø4 tube connection	1/4" ×5/32" tube connection	ø6 x ø4 tube connection	ø 6.35 × ø 4.3 tube connection	ø6 x ø4 tube connection	1/4" ×5/32" tube connection	ø6 x ø4 tube connection	1/4" ×5/32" tube connection	1/4" ×5/32" tube connection
❷ Body material													
Blank	PFA molded body or PTFE machined body	PTFE	PFA		PTFE		PTFE		PTFE		PTFE		PTFE
D	Stainless steel body	●											

* Machined PTFE products will be manufactured on a per-order basis.

Precautions for model No. selection

*1: Contact CKD if selecting an all-resin actuator that can be used for acidic fluids.

Operational principle

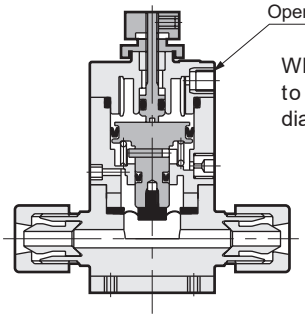

When using a fluid, apply air pressure to the operation port and lower the diaphragm.

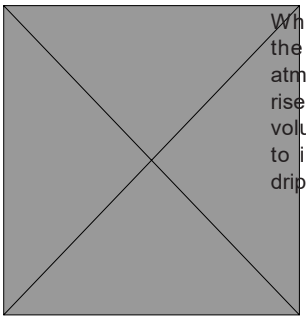

When stopping the fluid, releasing the air from the operation port to the atmosphere will cause the diaphragm to rise due to the force of the spring and the volume inside the drip prevention valve to increase, preventing the fluid from dripping.

Dimensions

●Rc thread

・AMSZ2-6

・AMSZ2-6-D

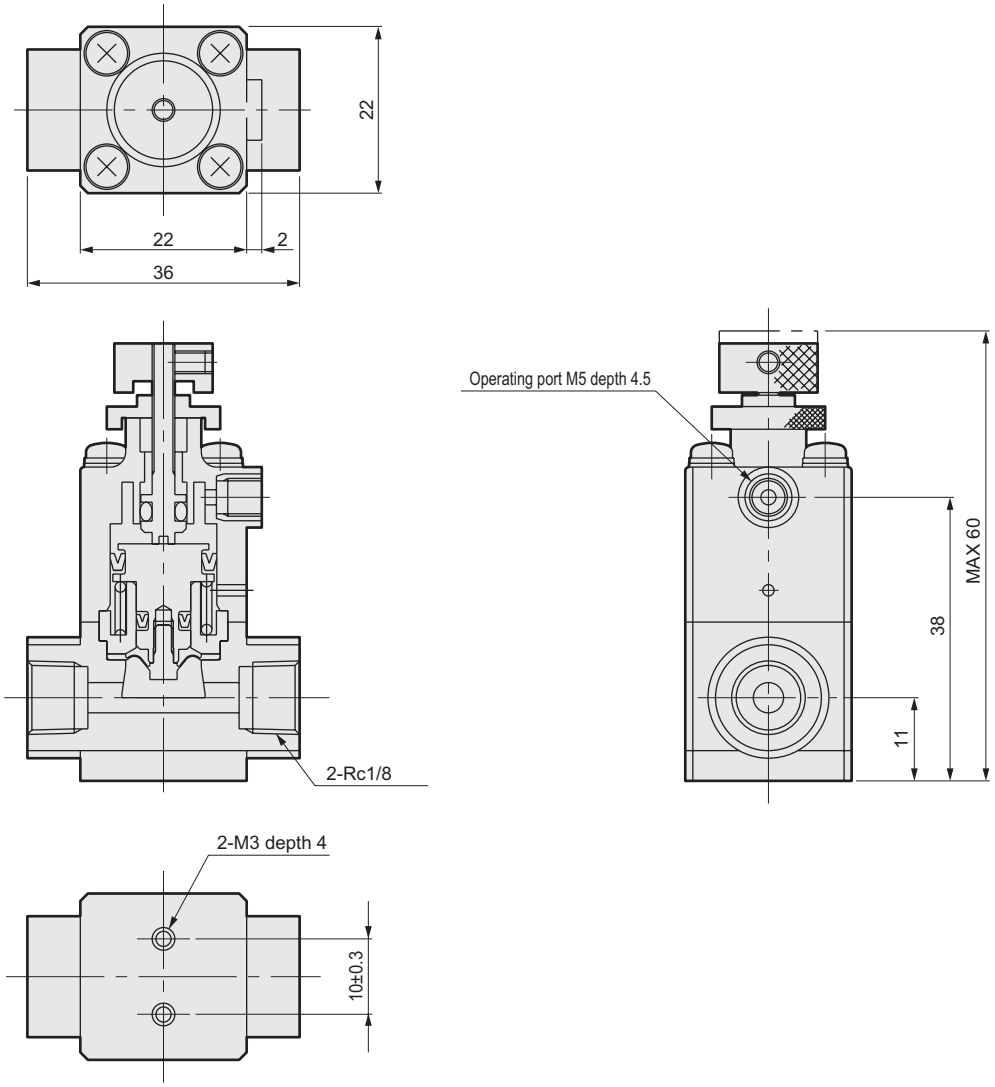

●Integrated fitting

・AMSZ2- *1

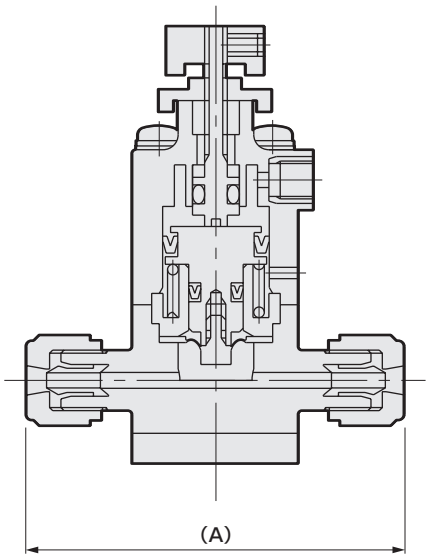

Dimensions *1 (Connector No.)	A
3US, 3UP	50
6BUS, 6BUP	50
3UF	40
3UR	57
6BUR	57

Dimensions

●Rc thread

・AMS022-6

・AMS022-6-D

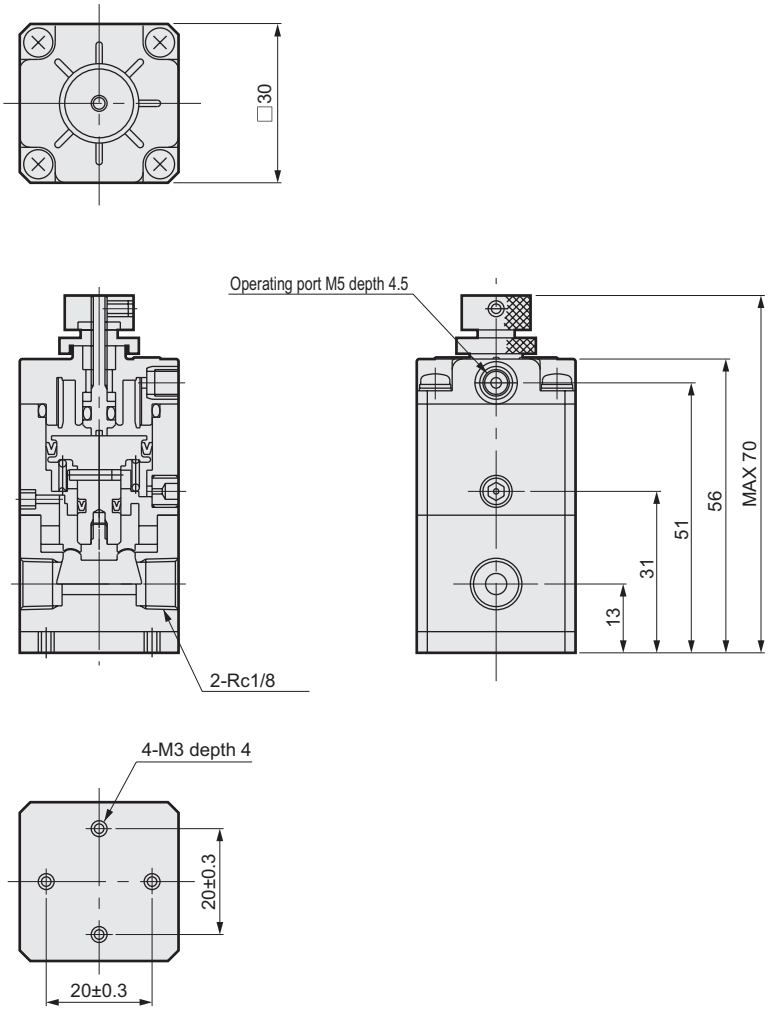

●Integrated fitting

・AMS022- *1

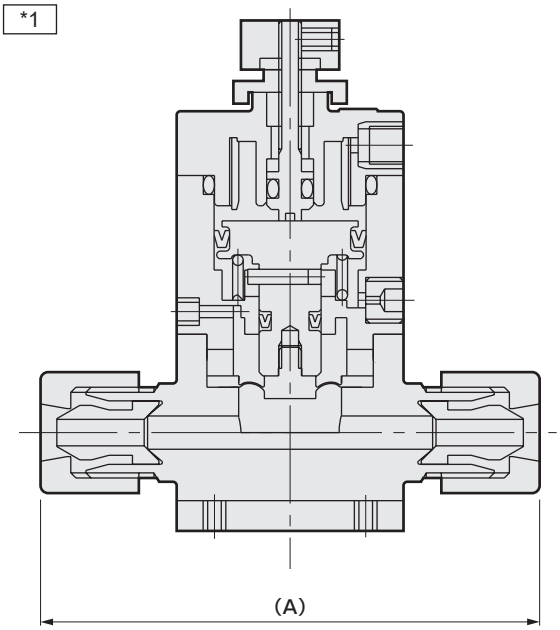

Dimensions *1 (Connector No.)	A
6US	66
8BUS	66
6UP	68
8BUP	68

Dimensions *1 (Connector No.)	A
6UF	64
8BUF	64
6UR	90
8BUR	92
6UK	71
8BUK	71
8BUW	86

Air operated valve for chemical liquids/drip prevention valve integrated

AMDSZ0 / AMDS00 Series

Achieves reduced steps in piping and compactness
●Maximum drip prevention amount: 0.04 cm^3/0.12 cm^3
●Connection tube size: ø3, ø6, ø6.35, 1/8", 1/4"

RoHS CAD

Specifications

Item		AMDSZ0-*	AMDS00-*
Working fluid		Chemical liquid, pure water (*1)	
Fluid temperature	°C	5 to 80	
Proof pressure	MPa	1.0	
Working pressure	MPa	0 to 0.2	
Ambient temperature	°C	0 to 60	
Mounting orientation		Horizontally mounted with port positioned vertically (OUT port up)	
Connection		O.D. ø3 tube connection O.D. 1/8" tube connection	O.D. ø6 tube connection O.D. 1/4" tube connection
Operating section	Operating pressure MPa	0.3 to 0.5	
	Operating port	M5	
Maximum drip prevention amount cm^3		0.04	0.12
Orifice size		ø2	ø4
Cv		0.08	0.32
Weight	kg	0.12	0.22

*1: Cannot be used with acidic fluids. Contact CKD regarding acidic fluids and aqueous ammonia.
Check the compatibility of product structural materials, working fluids and atmosphere.

Examples of use and related products

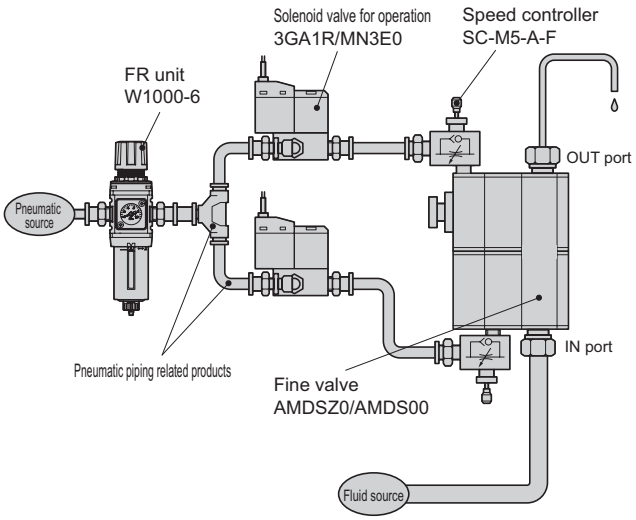

For related products, refer to the CKD website (https://www.ckd.co.jp/kiki/en/).

Internal structure and parts list

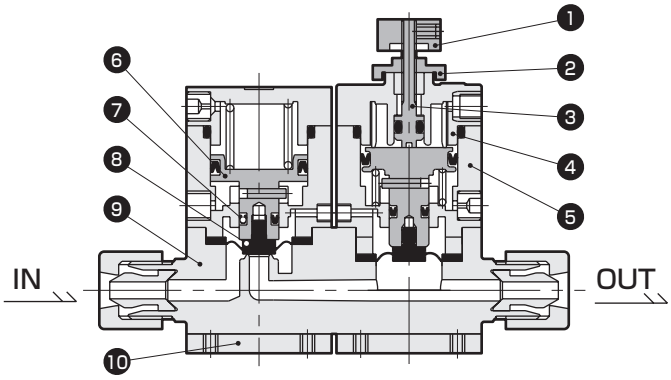

Part No.	Part name	Material
1	Knob	SUS303
2	Lock nut	SUS303
3	Adjusting rod	SUS303
4	Cover	PPS
5	Cylinder	PPS
6	Piston rod	SUS303
7	Y packing	NBR
8	Diaphragm	PTFE
9	Body	PFA, PTFE
10	Mounting plate	SUS304

The material and structure may vary depending on the model number. Contact CKD for details.

⚠ Always read the precautions on Intro Pages 7 to 14 before use.

How to order

●AMDSZ Series

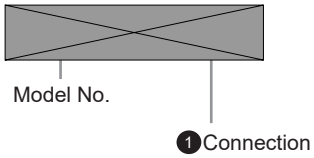

Code	Description	1 Connection						
		3US	6BUS	3UP	6BUP	3UF	3UR	6BUR
		Super Type Pillar fitting Integrated		Super 300 Pillar fitting P series integrated		F-LOCK 20 Series Integrated fitting	F-LOCK 60 Series Integrated fitting	
		ø3 x ø2 tube connection	1.8" x 0.086" tube connection	ø3 x ø2 tube connection	1.8" x 0.086" tube connection	ø3 x ø2 tube connection	ø3 x ø2 tube connection	1/8" ×1/16" tube connection
Body material								
PFA molded body or PTFE machined body		PFA		PFA		PTFE	PTFE	

* Machined PTFE products will be manufactured on a per-order basis.

●AMDS0 Series

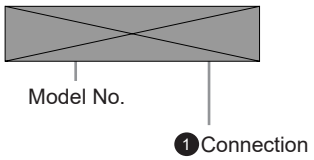

Code	Description	1 Connection										
		6US	8BUS	6UP	8BUP	6UF	8BUF	6UR	8BUR	6UK	8BUK	8BUW
		Super Type Pillar fitting Integrated		Super 300 Pillar fitting P series integrated		F-LOCK 20 Series Integrated fitting		F-LOCK 60 Series Integrated fitting		Final Lock Fitting Integrated		Flaretek Fitting Integrated
		ø6 x ø4 tube connection	1/4" ×5/32" tube connection	ø6 x ø4 tube connection	1/4" ×5/32" tube connection	ø6 x ø4 tube connection	ø 6.35 × ø 4.3 tube connection	ø6 x ø4 tube connection	1/4" ×5/32" tube connection	ø6 x ø4 tube connection	1/4" ×5/32" tube connection	1/4" ×5/32" tube connection
Body material												
PFA molded body or PTFE machined body		PFA		PTFE		PTFE		PTFE		PTFE		PTFE

* Machined PTFE products will be manufactured on a per-order basis.

Precautions for model No. selection

*1: Contact CKD if selecting all-resin for an actuator that can be used for acidic fluids.
*2: The low-sliding (diaphragm) actuator is also supported to reduce foaming and improve liquid drainage performance. Contact CKD for details.

Dimensions

●Integrated fitting

・AMDSZ0- *1

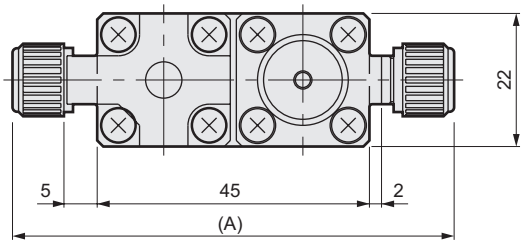

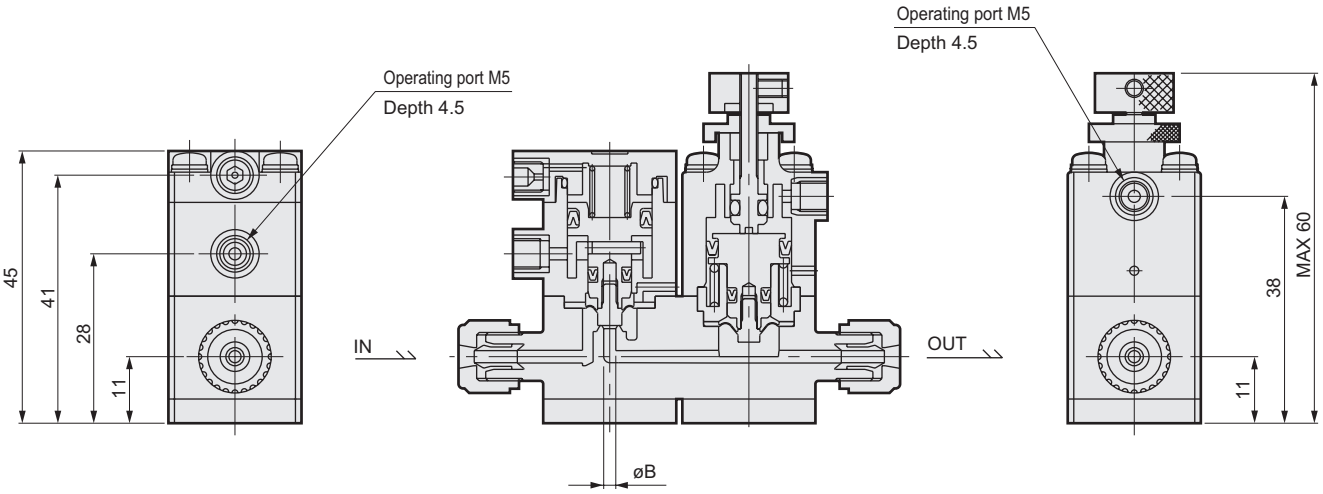

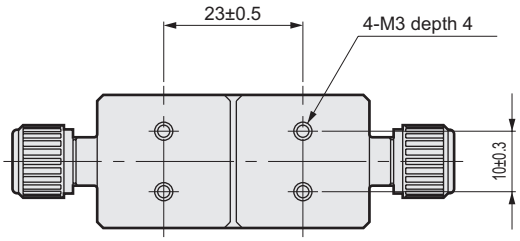

Dimensions *1 (Connector No.)	A	B
3US, 3UP	73	2
6BUS, 6BUP	73	2
3UF	63	2
3UR	80	1.6
6BUR	80	1.6

Dimensions

●Integrated fitting

・AMDS00- *1

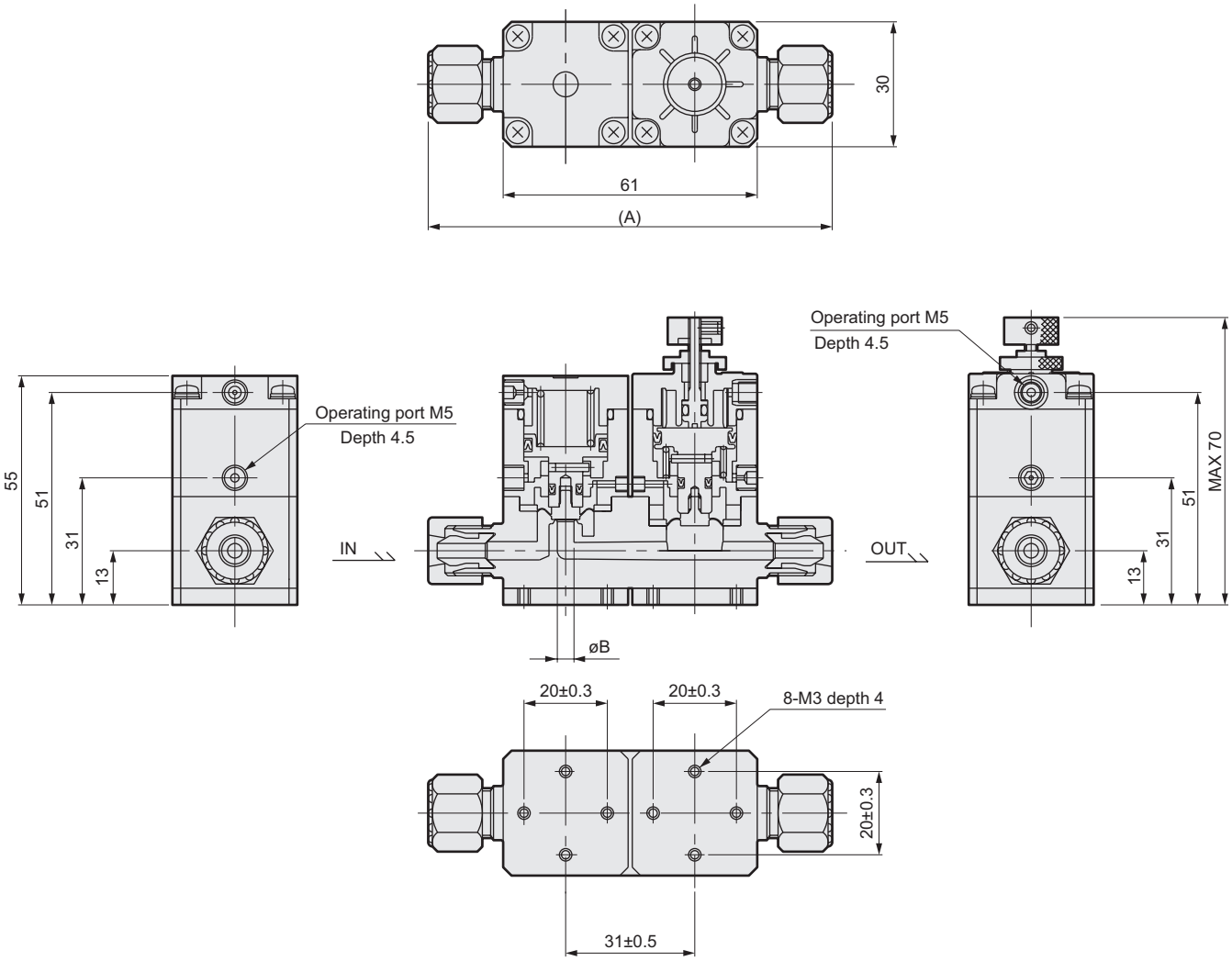

Dimensions *1 (Connector No.)	A	B
6US	97	4
8BUS	97	4
6UP	99	4
8BUP	99	4
6UF	95	4
8BUF	95	4
6UR	121	3.5
8BUR	123	3.5
6UK	102	4
8BUK	102	4
8BUW	117	3

MEMO

Regulator

Overview

A pressure reducing valve for pure water, chemical liquids, air and N_2 gas. Excellent corrosion resistance and easy to install. It can be selected from stainless steel and fluorine resin depending on the application.

Features

PMP

- Excellent pressure stability and high-speed response.
- Flow path structure with less retention area.
- All-fluororesin wetted parts (PTFE, PFA)

PYM (for Air/N_2 gas/pure water)

- Stainless steel body, wetted parts are made of fluororesin (PTFE) and SUS316.
- Filter built in
  Provides safety with regard to foreign matter in fluids.

PMM20

- Uses a fluororesin body and all-fluororesin wetted parts (PFA, PTFE).
- Integrated fitting that provides great measures against contamination.

PMM50

- A pressure reducing valve designed to support a large flow rate supply of pure water and warm pure water.

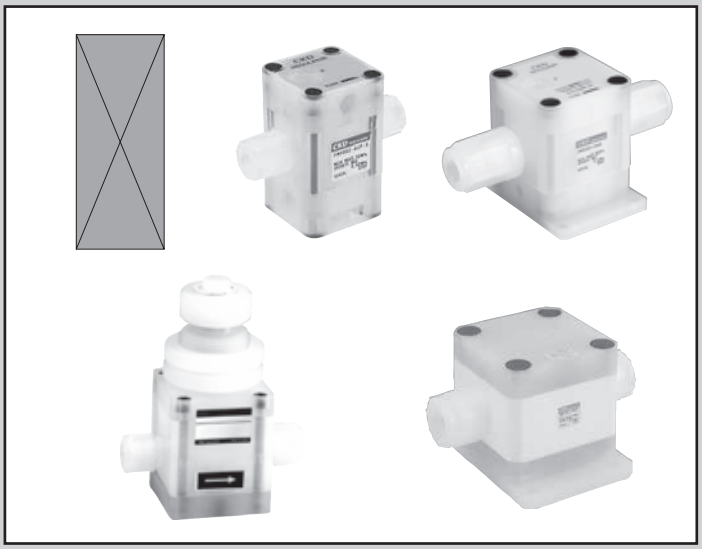

Safety precautions	Intro Page 9
Pilot operated	
PMP002	160
PMP202	160
PMP402	160
Manual	
PYM	166
PMM20	168
PMM50	170

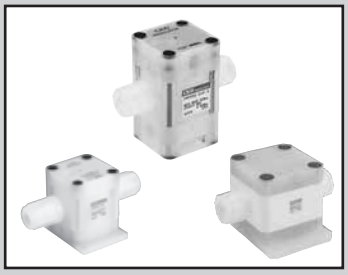

Fine regulator (pilot operated)

PMP$^{0}_{2}{}_{4}$02 Series

Changes in pressure of chemical liquids and pure water supply parts can be achieved with pilot air control, A regulator designed to adjust pressure for stability.

RoHS

- Connection tube size: ø6, ø10, ø12, ø25,1/4", 3/8", 1/2", 3/4", 1"

Export controlled items

* Eligibility: PMP402 (*4)

Specifications

Item	PMP002	PMP202	PMP402
Working fluid	Pure water, chemical liquids (*2)		Pure water (*3)
Fluid temperature °C	10 to 90		10 to 90
Proof pressure MPa	1.0		1.0
Max. working pressure MPa	0.5		0.5
Set pressure MPa	0.02 to 0.3		0.07 to 0.4
Operating pressure MPa	0 to 0.4		0 to 0.45
Recommended flow rate L/min	0.2 to 3	0.2 to 5	2 to 20
Operating port	Rc1/8		Rc1/8
Ambient temperature °C	10 to 60		10 to 60
Mounting orientation	Unrestricted		Unrestricted
Connection	O.D. ø6 tube connection (integrated fitting), O.D. 1/4" tube connection (integrated fitting), O.D. ø10 tube connection (integrated fitting), O.D. 3/8" tube connection (integrated fitting)		O.D. 3/4" tube connection (Integrated fitting) (O.D. 1" and OD1/2" options available)
Weight kg	0.13	0.28	1.7

*1: Non-relief
*2: Check the compatibility of product structural materials, working fluids and atmosphere.
*3: Contact CKD when using chemical liquids.
*4: Excludes O.D. ø12 and 1/2" tube connection.
*5: When using chemical liquids with high permeability, permeated gas may contaminate the pilot mechanism, which may adversely affect the operating components. Consult with CKD if protection is needed for the operating components.

Application

Stable discharge (pressure/flow rate)

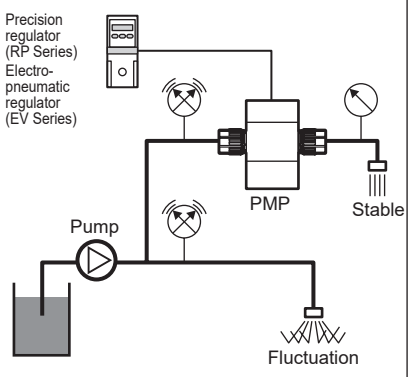

Branched flow rate uniformizing

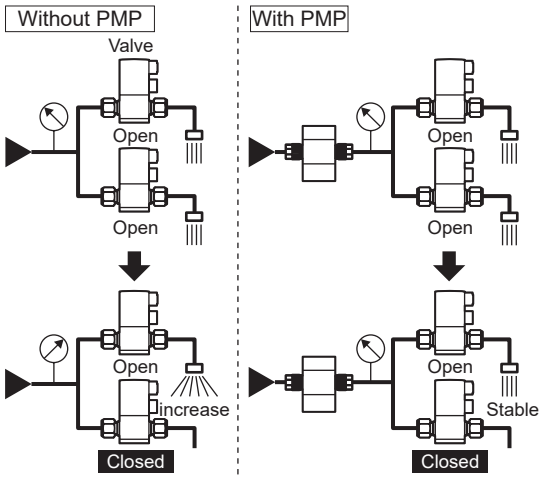

Remote flow rate setting

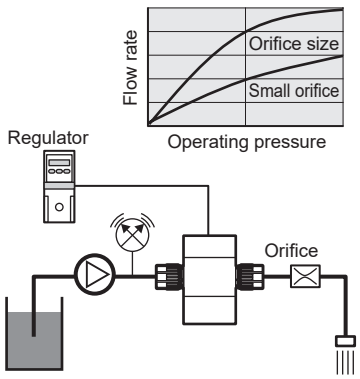

Note: Install a flow rate adjustment valve such as FMD00 on the secondary side when adjusting fine flow rates.

Always read the precautions on Intro Pages 7 to 14 before use.

Internal structure and parts list

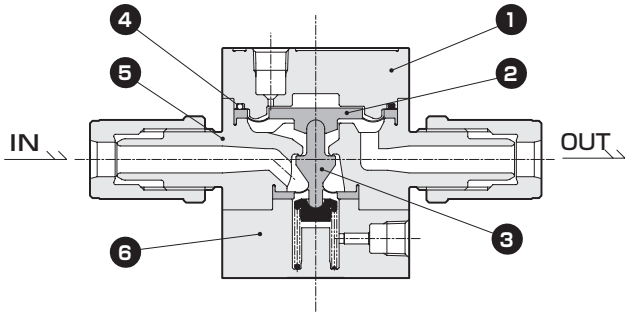

Part No.	Part name	Material
1	Cover	PVDF
2	Diaphragm	PTFE
3	Valve diaphragm	PTFE
4	O-ring	FKM
5	Body	PFA, PTFE
6	Bottom plate	PVDF

The material and structure may vary depending on the model number. Contact CKD for details.

How to order

PMP002 - 10BUP - X

Model No. ❶ Connection ❷ Mounting method

Code	Description	❶ Connection 6UP	8BUP	10UP	10BUP
		Super 300 Pillar fitting P Series integrated			
		ø6 x ø4 tube connection	1/4" ×5/32" tube connection	ø10 x ø8 tube connection	3/8" x 1/4" tube connection
Body material		PFA		PFA	
❷ Mounting method					
F	Flange mounting	●		●	
X	Bottom mounting	●		●	

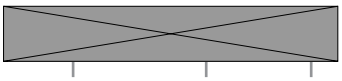

Model No. ❶Connection ❷Bottom plate direction

Code	Description	❶ Connection 6UP	8BUP	6UR	8BUR	10UP	10BUP	10UR	10BUR
		Super 300 Pillar fitting P series integrated		F-LOCK 60 Series Integrated fitting		Super 300 Pillar fitting P series integrated		F-LOCK 60 Series Integrated fitting	
		ø6 x ø4 tube connection	1/4" ×5/32" tube connection	ø6 x ø4 tube connection	1/4" ×5/32" tube connection	ø10 x ø8 tube connection	3/8" x 1/4" tube connection	ø10 x ø8 tube connection	3/8" x 1/4" tube connection
Body material		PFA		PFA		PFA		PFA	
❷ Bottom plate direction									
Blank	Vertical	●		●		●		●	
1	Horizontal	●		●		●		●	

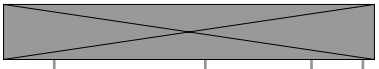

Model No. ❶Connection Fluid specification ❷Bottom plate direction

Code	Description	❶ Connection 12UP	25UP	15BUP	20BUP	25BUP
		Super 300 Pillar fitting P Series integrated				
		ø12 x ø10 tube connection	"25 × ø22 tube connection	1/2" x 3/8" tube connection	3/4" x 5/8" tube connection	1" x 7/8" tube connection
Body material		PTFE	PTFE	PTFE	PTFE	PTFE
❷ Bottom plate direction						
Blank	Vertical	●	●	●	●	●
1	Horizontal	●	●	●	●	●

Flow characteristics / Pressure characteristics / Pressure adjustment characteristics

PMP002

Flow characteristics 1 (water)

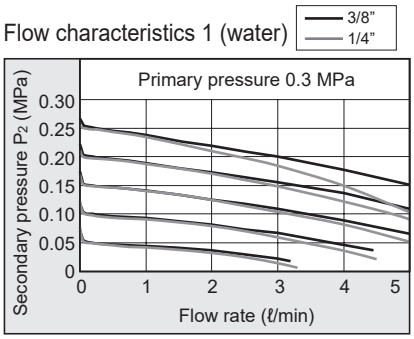

Flow characteristics 2 (water)

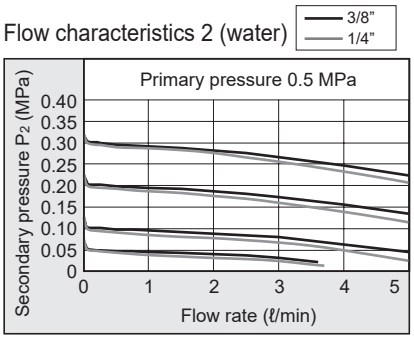

Pressure characteristics (water)

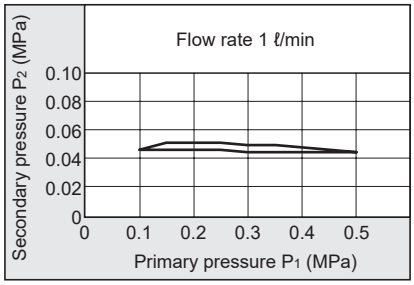

Pressure adjustment characteristics (water)

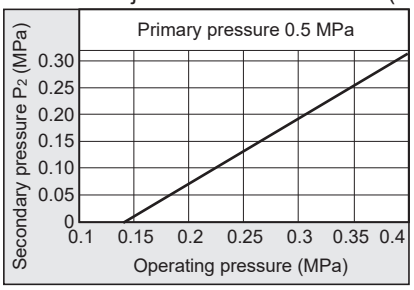

PMP202

Flow characteristics 1 (water)

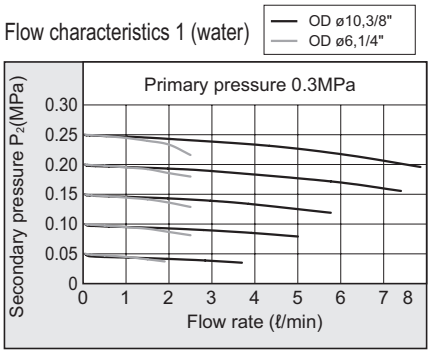

Flow characteristics 2 (water)

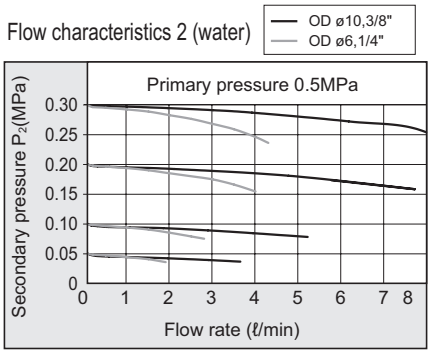

Pressure characteristics (water)

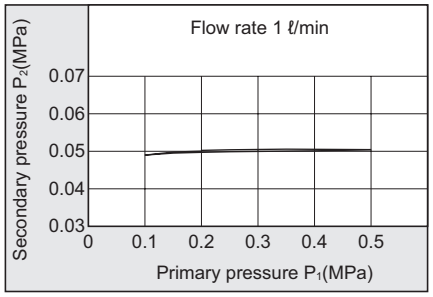

Pressure adjustment characteristics (water)

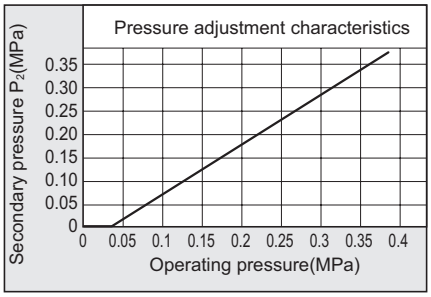

PMP402

Flow characteristics 1 (water)

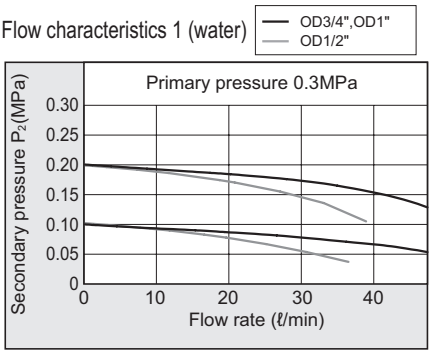

Flow characteristics 2 (water)

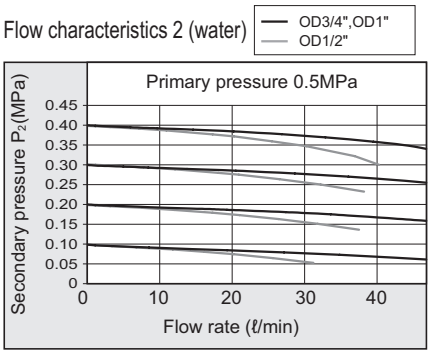

Pressure characteristics (water)

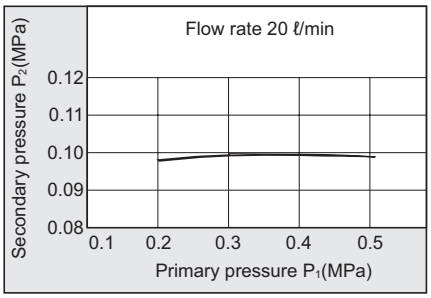

PMP402

Pressure adjustment characteristics (water)

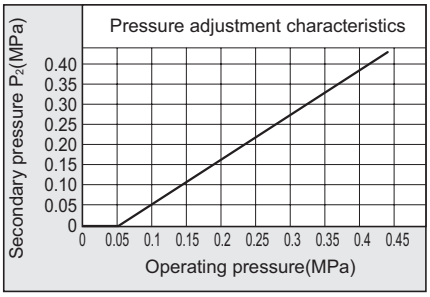

Reference data

Responsivity Tracking of secondary side pressure for operating air

PMP002

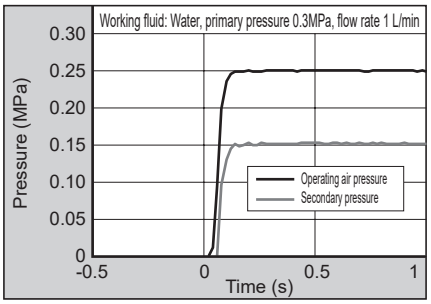

PMP202

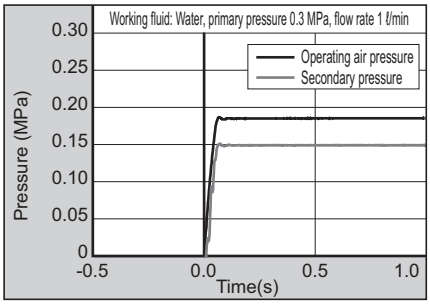

PMP402

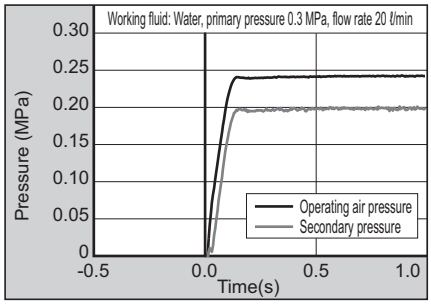

Pulsation absorption Stability of secondary pressure against pulsation of primary pressure

PMP002

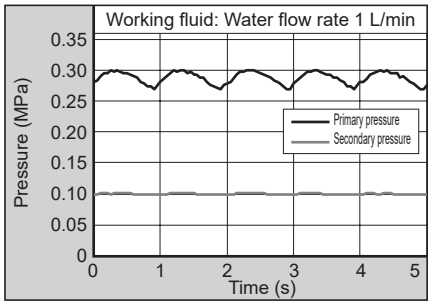

PMP202

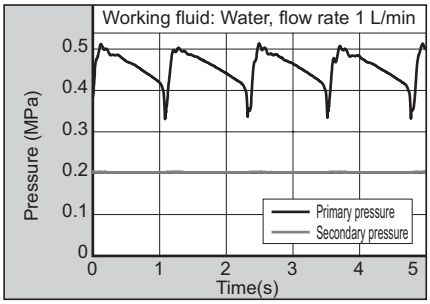

PMP402

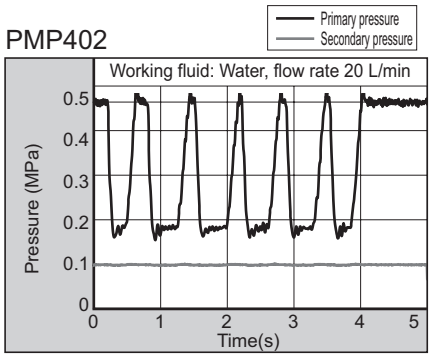

Operating air pressure - secondary pressure characteristics (water)

PMP002

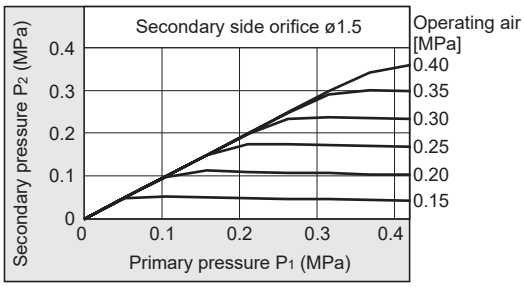

Operating air pressure - flow characteristics (water)

PMP002

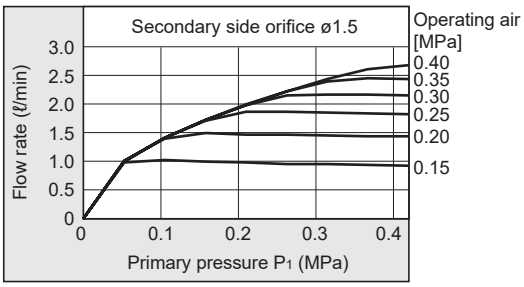

■ How to use

- Set the temperature, pressure, flow rate and other use conditions within the specification range of the product.
- If the product will be out of use for long periods, stop the supply pressure on the primary side.
- This product is a non-relief-type, and if used with the secondary side closed, it may retain the high pressure generated by water hammer, etc.
- Do not use as a residual pressure exhaust valve.

Dimensions

●PMP002- *1 -*

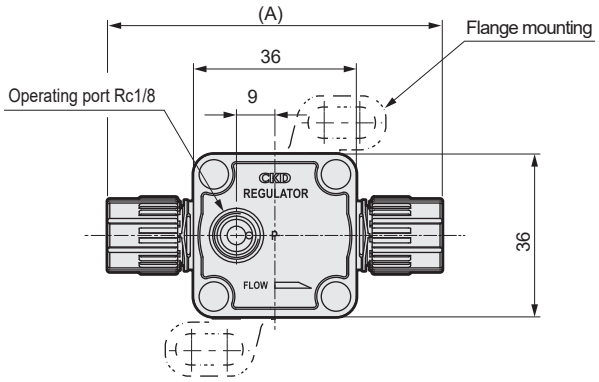

Dimensions *1 Connector No.	A
6UP	74
8BUP	74
10UP	86
10BUP	86

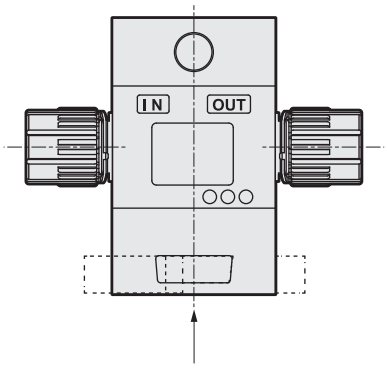

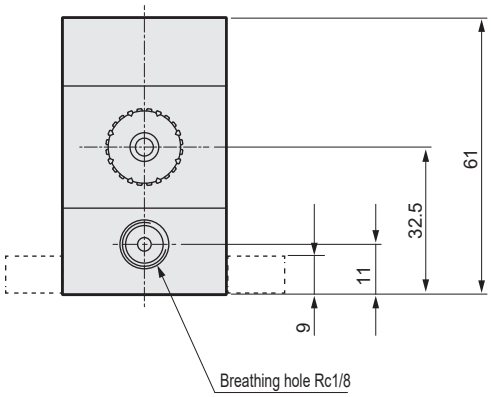

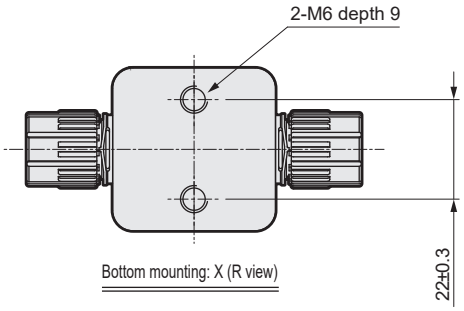

Bottom mounting: X (R view)

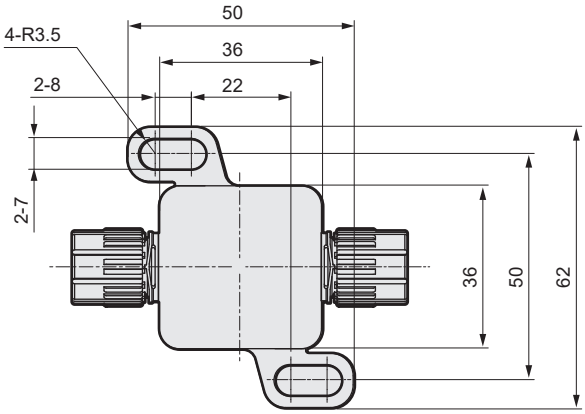

Flange mounting: F (R view)

●PMP202- *1 -*

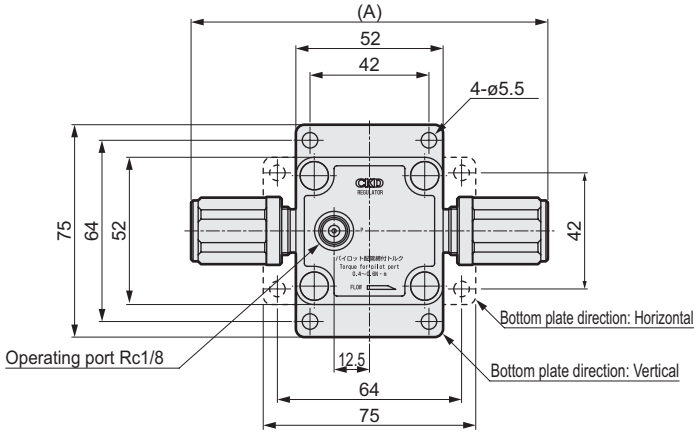

Dimensions *1 (Connector No.)	A
6UP	90
8BUP	90
6UR	112
8BUR	114
10UP	102
10BUP	102
10UR	126
10BUR	130

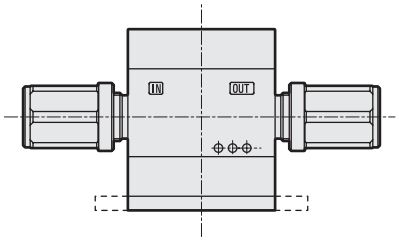

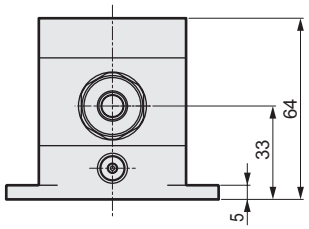

●PMP402- *1 -*N

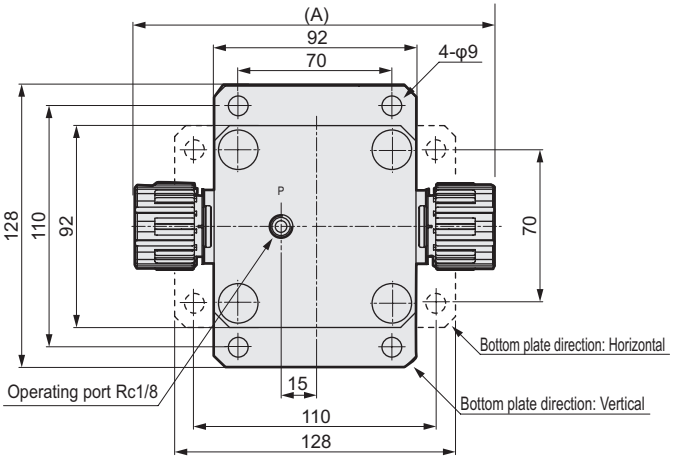

Dimensions *1 (Connector No.)	A
12UP, 15BUP	150
20BUP	164
25UP, 25BUP	178

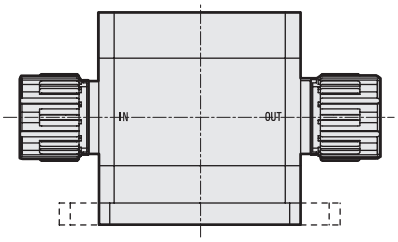

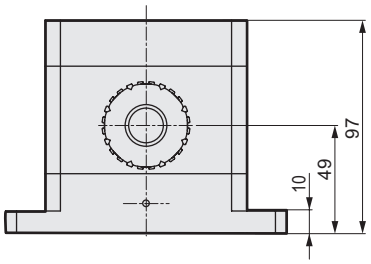

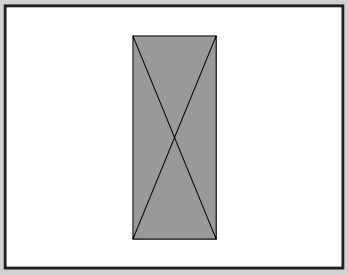

Fine regulator (manual)

PYM Series

Stainless steel body
Regulator for air, N2 gas and pure water
● Connection: Rc1/8″, 1/4″

RoHS

Specifications

Item		PYM10-6	PYM10-8
Working fluid		Pure water, N_2 gas, air (*3)	
Fluid temperature	°C	5 to 60	
Proof pressure	MPa	1.5	
Max. working pressure	MPa	0.99	
Set pressure	MPa	0.02 to 0.2 (*2)	
Ambient temperature	°C	0 to 60	
Mounting orientation		Unrestricted	
Port size and gauge port size		Rc1/8	Rc1/4
Weight	kg	0.77	

*1: Wetted parts material: PTFE, SUS316, Non-relief
*2: Set pressure range of 0.02 to 0.4 MPa is also available. Contact CKD for details.
*3: Cannot be used with acidic fluids.
*4: Check the compatibility of product structural materials, working fluids and atmosphere.

Internal structure and parts list

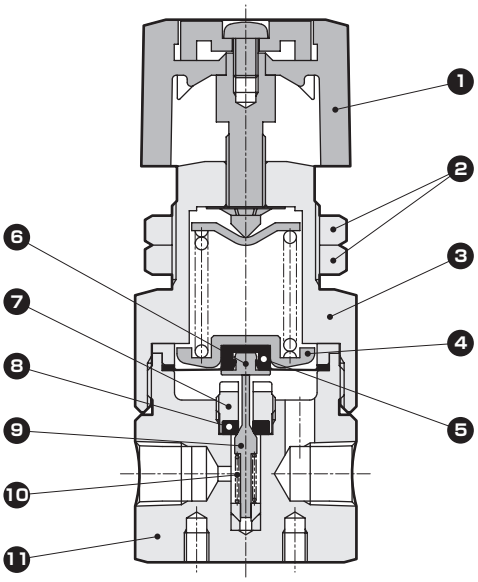

Part No.	Part name	Material
1	Pressure adjustment knob	ABS
2	Lock nut	SUS304
3	Cover	C3604 (nickel-phosphorus plating)
4	Spring rest	SUS304
5	Diaphragm	PTFE
6	Diaphragm retainer	SUS316
7	Valve disk holder	SUS316
8	Valve disc	PTFE
9	Valve	SUS316
10	Spring	SUS316
11	Body	SUS316

The material and structure may vary depending on the model number. Contact CKD for details.

How to order

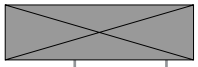

Model No.

❶ Port size

❶ Port size	
6	Rc1/8
8	Rc1/4

⚠ Always read the precautions on Intro Pages 7 to 14 before use.

Flow characteristics / Pressure characteristics

Flow characteristics (water)

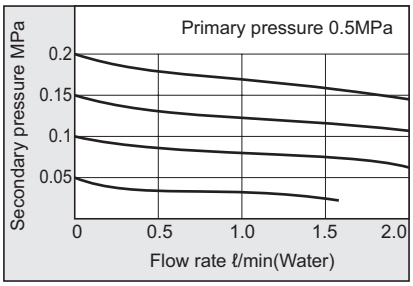

Flow characteristics (air)

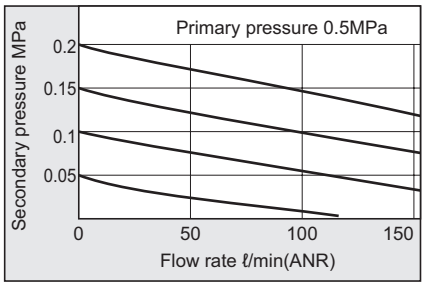

Pressure characteristics (water)

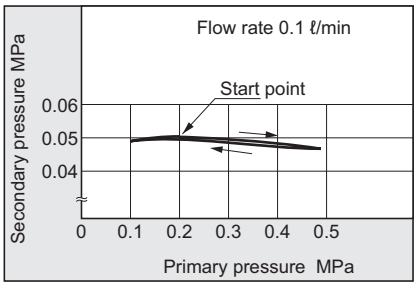

Dimensions

●PYM10-6 (Rc1/8)

●PYM10-8 (Rc1/4)

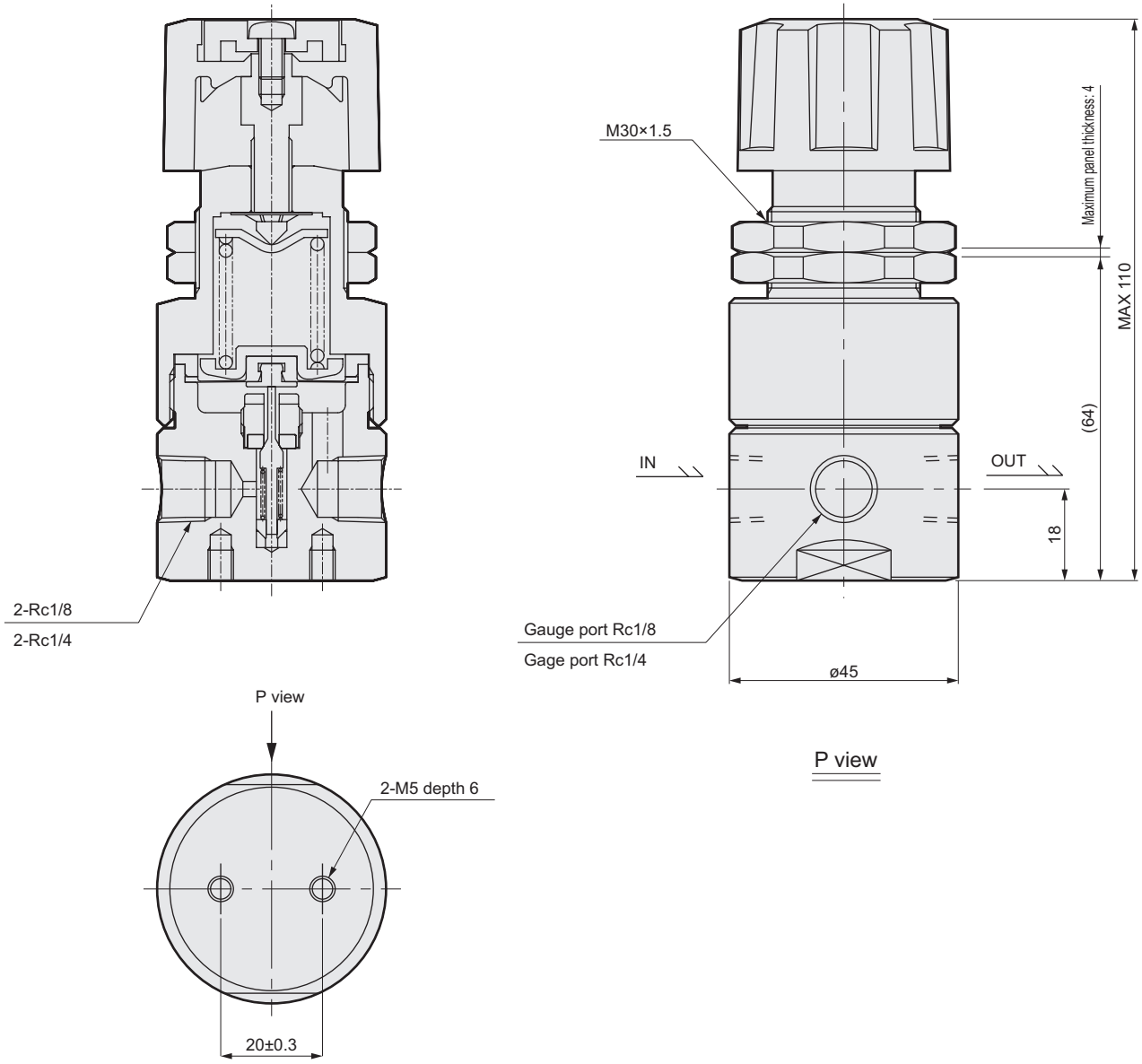

■ How to use

- Set the temperature, pressure, flow rate and other use conditions within the specification range of the product.
- If the product will be out of use for long periods, stop the supply pressure on the primary side.
- This product is a non-relief-type, and if used with the secondary side closed, it may retain the high pressure generated by water hammer, etc.
- Do not use as a residual pressure exhaust valve.

Fine regulator (manual)

PMM20 Series

Pressure reducing valve for pure water with all fluoroplastic wetted parts

● Connection tube size: ø8, ø10, 3/8"

RoHS

Specifications

Item		PMM20
Working fluid		Pure water
Fluid temperature	°C	5 to 80
Proof pressure	MPa	0.75
Max. working pressure	MPa	0.5
Set pressure	MPa	0.02 to 0.2 (*3)
Ambient temperature	°C	0 to 60
Mounting orientation		Unrestricted
Connection		O.D. ø10 tube connection (integrated fitting) O.D. 3/8" tube connection (integrated fitting)
Weight	kg	0.42

*1: Non-relief
*2: Panel mounting is also available.
*3: The set pressure range 0.05 to 0.4 MPa can be handled by adding "-H" at the end of the model number. (The fluid temperature will be 5 to 40°C) Contact CKD for details.

Internal structure and parts list

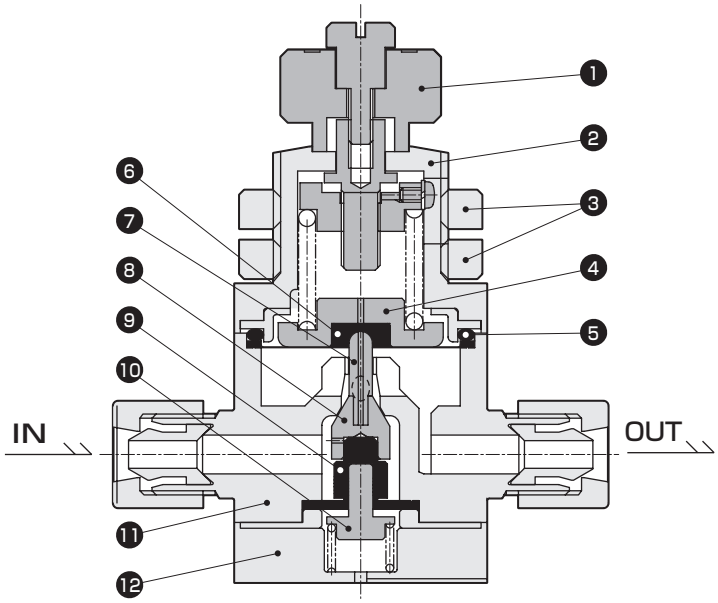

Part No.	Part name	Material
1	Pressure adjustment knob	PP
2	Cover	PP
3	Lock nut	PP
4	Spring rest	SUS304
5	O-ring	FKM
6	Diaphragm	PTFE
7	Stem	PCTFE
8	Valve	PTFE
9	Bellows	PTFE
10	Rod	SUS304
11	Body	PFA
12	Bottom plate	PP

The material and structure may vary depending on the model number. Contact CKD for details.

How to order

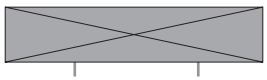

Model No. ❶Connection

❶ Connection	8US	10US	10BUS	10UP	10BUP	10UA	10BUA	10UR	10BUR	10UK	10BUK	10BUW
	Super Type Pillar fitting Integrated			Super 300 Pillar fitting P series integrated		F-LOCK 20A Series Integrated fitting		F-LOCK 60 Series Integrated fitting		Final Lock Fitting Integrated		Flaretek Fitting Integrated
	ø8 x ø6 tube connection	ø10 x ø8 tube connection	3/8" x 1/4" tube connection	ø10 x ø8 tube connection	3/8" x 1/4" tube connection	ø10 x ø8 tube connection	3/8" x 1/4" tube connection	ø10 x ø8 tube connection	3/8" x 1/4" tube connection	ø10 x ø8 tube connection	3/8" x 1/4" tube connection	3/8" x 1/4" tube connection
Description												
Body material												
PFA molded body or PTFE machined body	PFA			PTFE		PTFE		PTFE		PTFE		PTFE

* Machined PTFE products will be manufactured on a per-order basis.

⚠ Always read the precautions on Intro Pages 7 to 14 before use.

Flow characteristics / Pressure characteristics

Flow characteristics (water)

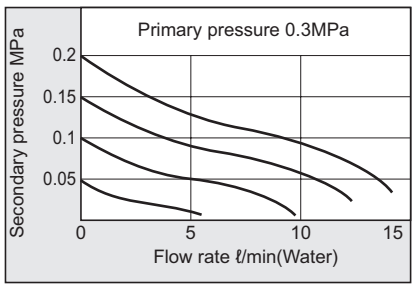

Pressure characteristics 1 (water)

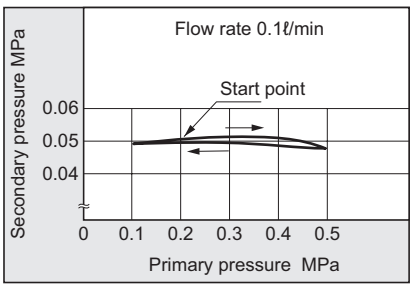

Pressure characteristics 2 (water)

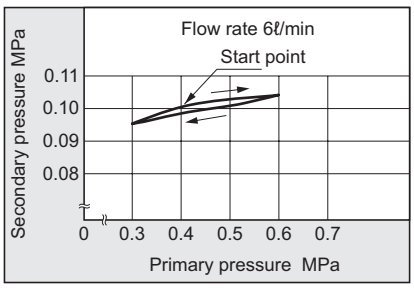

Dimensions

●PMM20- *1

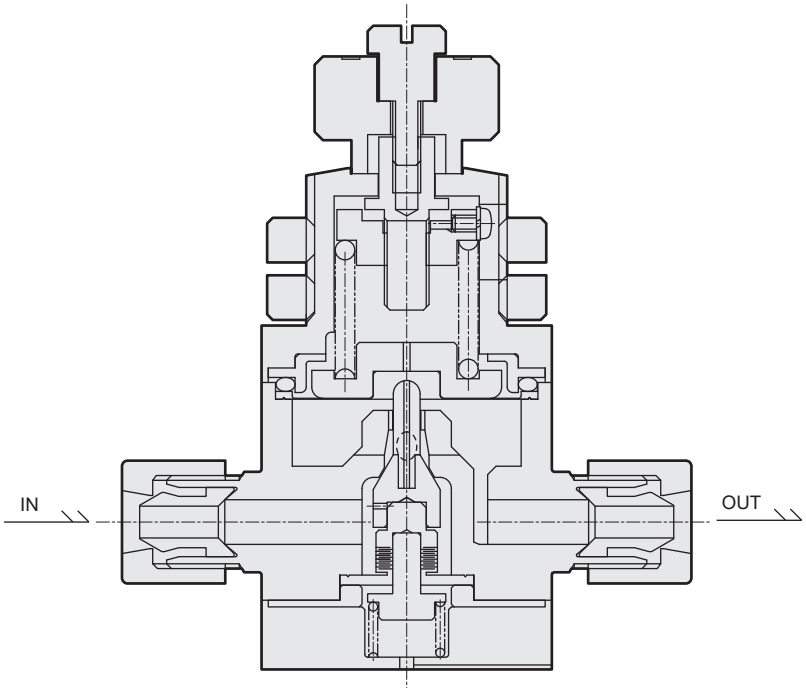

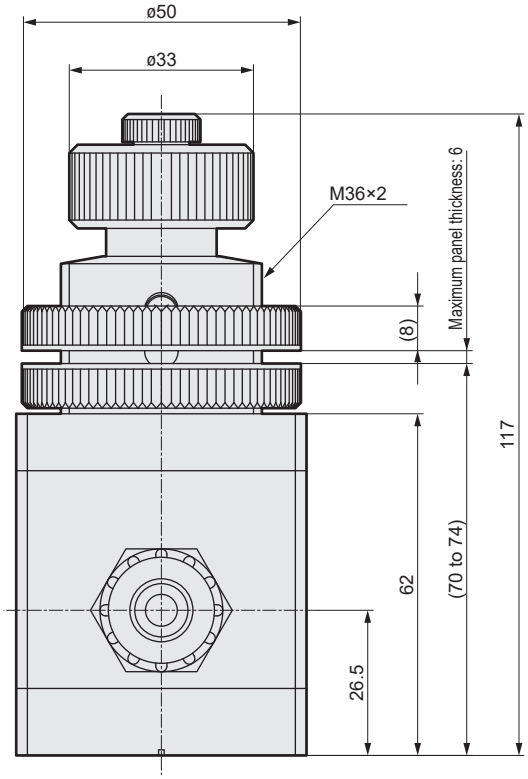

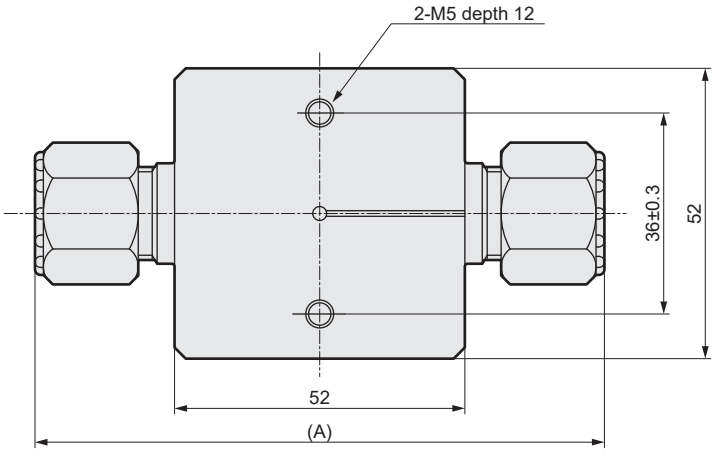

Dimensions *1 (Connector No.)	A
8US	94
10US	102
10BUS	102
10UP	102
10BUP	102
10UA	94
10BUA	94
10UR	126
10BUR	130
10UK	112
10BUK	112
10BUW	113

■ How to use

- Set the temperature, pressure, flow rate and other use conditions within the specification range of the product.
- If the product will be out of use for long periods, stop the supply pressure on the primary side.
- This product is a non-relief-type, and if used with the secondary side closed, it may retain the high pressure generated by water hammer, etc.
- Do not use as a residual pressure exhaust valve.

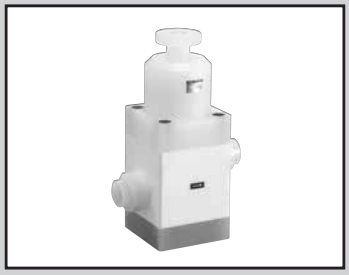

Fine regulator (manual)

PMM50 Series

A pressure reducing valve designed to support a large flow supply of pure water and warm pure water.

● Connection Nominal 25, PVDF union integrated

RoHS

Made-to-order product | Export controlled items

Specifications

Item		PMM50-25AFU
Working fluid		Pure water
Fluid temperature	°C	5 to 80
Proof pressure	MPa	0.75
Max. working pressure	MPa	0.5
Set pressure	MPa	0.1 to 0.3
Ambient temperature	°C	5 to 40
Mounting orientation		Vertical mounting with the pressure adjustment knob on top
Connection		Nominal 25, PVDF union integrated fitting
Weight	Kg	5.5

*1: Non-relief

Internal structure and parts list

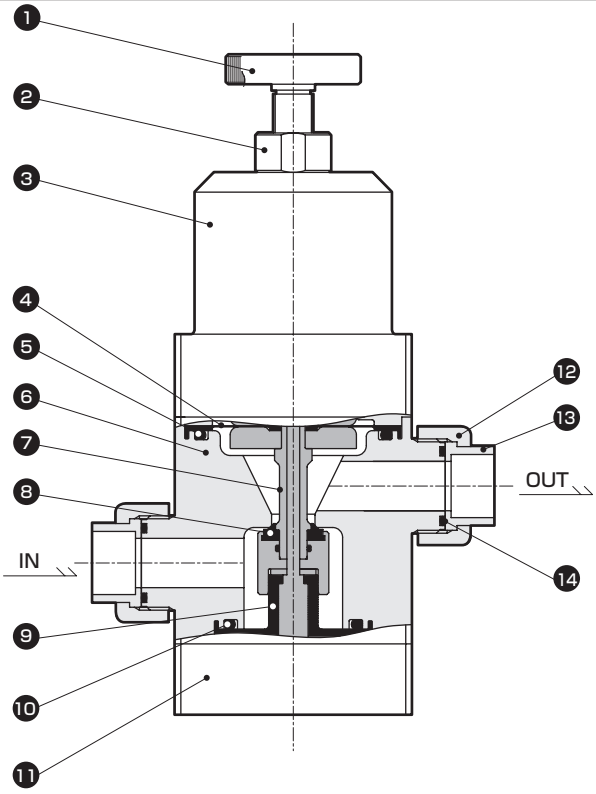

Part No.	Part name	Material	Part No.	Part name	Material
1	Pressure adjustment knob	PP	8	Valve seat	FKM
2	Lock nut	PP	9	Bellows	PTFE
3	Cover	PP	10	O-ring	FKM
4	Diaphragm	PTFE	11	Bottom plate	PVDF
5	O-ring	FKM	12	Union nut	PVDF
6	Body	PTFE	13	Union end	PVDF
7	Rod sleeve	PVDF	14	O-ring	FKM

How to order

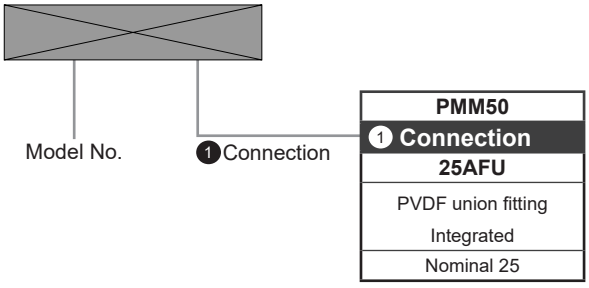

⚠ Always read the precautions on Intro Pages 7 to 14 before use.

Flow characteristics / Pressure characteristics

Flow characteristics (water)

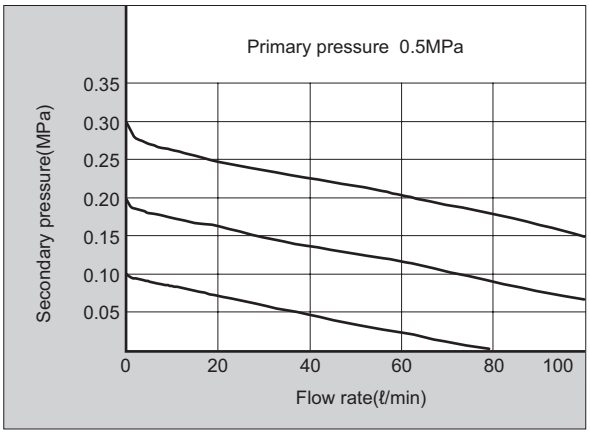

Pressure characteristics (water)

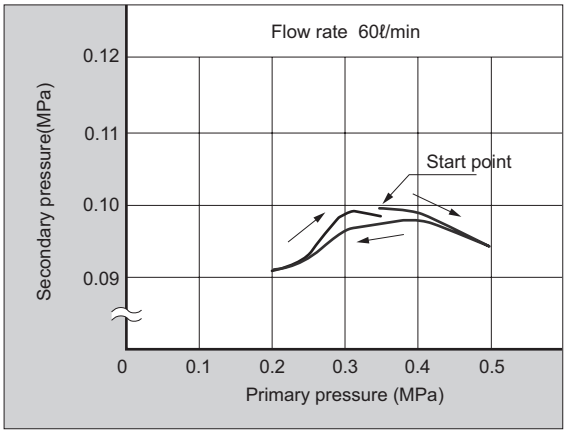

Dimensions

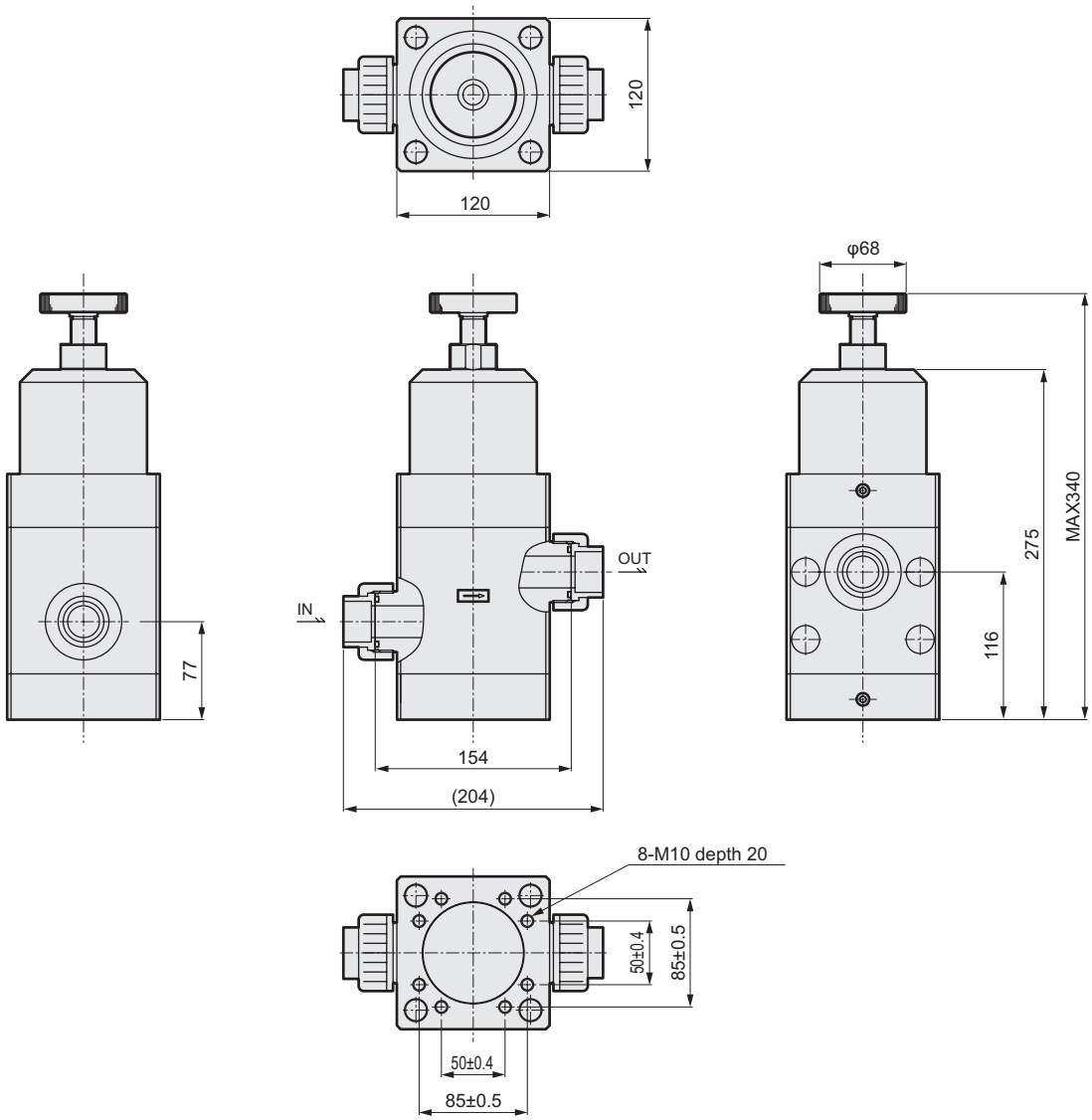

■ How to use

- Set the temperature, pressure, flow rate and other use conditions within the specification range of the product.
- If the product will be out of use for long periods, stop the supply pressure on the primary side.
- This product is a non-relief-type, and if used with the secondary side closed, it may retain the high pressure generated by water hammer, etc.
- Do not use as a residual pressure exhaust valve.

MEMO

Flow rate adjusting valve

Overview

A flow regulating valve using resin for the wetted parts that adjusts the flow rate of chemical liquids.

Features

MNV

- An electrical flow rate regulating valve with adjusting range of 600 steps.
- It supports fluids of 20°C to 195°C.

FMD00

- A fine flow rate control valve designed to support highly corrosive fluids.

⚠ Safety precautions	Intro Page 9
Motorized	
MNV	174
Manual	
FMD00	176
Manual fine flow rate	
LYX-0961 LYX-0965	180

Electric needle valve for chemical liquid

MNV Series

● Connection tube size: 3/8”

RoHS

Specifications

1. Valve/body

Item	MNV00-10BUP-1-G
Working fluid	Chemical liquids, pure water (*1)
Fluid temperature °C	20 to 195
Proof pressure MPa	0.5
Working pressure (A→B) MPa	0 to 0.2
Fluid differential pressure kPa	5 to 200 (differential pressure between ports A and B)
Setting range	0 to 600step (motor drive step) • 0step valve open side, home sensor detection • 600step valve closed side, with stopper
Operating ambient temperature °C	20 to 100
Operating ambient humidity%RH	20 to 85 (no condensation)
Storage ambient temperature °C	0 to 60
Storage ambient humidity%RH	20 to 85 (no condensation)
Mounting orientation	Unrestricted
Connection	Super 300 pillar fitting P series integrated 3/8" x 1/4" fitting for PFA tube
Orifice size mm	ø3.4
Degree of protection	Waterproof (IP65 or equivalent)
Weight kg	0.51

*1: Check the compatibility of product structural materials, working fluids and atmosphere. It cannot be used for nitric acid, hydrochloric acid, hydrofluoric acid, ozone or organic fluids.

2. Motor

Type	2-phase stepper motor (bipolar)
Drive method	Full step (step angle: 1.8°)
Rated drive current mA/phase	350
Drive speed pps	650

3. Sensor

Power supply voltage	24 VDC ±10% Ripple (P-P) 10[%] or less
Current consumption	50 mA or less
Control output	NPN open collector output, 40 mA or less
Operation mode	Output ON when opening the valve open side from the origin position
Response frequency	1 kHz or more

4. Purge (*2)

Purge flow rate L/min	15 to 30
Internal pressure kPa	0 to 100
Fluid temperature °C	10 to 30
Port size	IN port: Rc1/8, EXH port: Rc1/8
Purge supply fluid	Clean compressed air, equivalent to JIS grade 2.6.1 (JIS B 8392-1:2003)

*2: Purge must be performed. Also, be sure to adjust the flow rate to the specified flow rate by providing a speed control valve on the supply side.

5. Cable

Conductor sectional area	AWG#24, approx. 0.2 [mm^2]
Conductor material	Tin plated annealed copper wire
Lead wire coating O.D.	Approx. 1.14 [mm]
Lead wire insulation material	ETFE
Cable finish O.D.	Approx. 4.4 [mm]
Coating sheath material	FEP, black
Cable length	3 m

6. Wiring

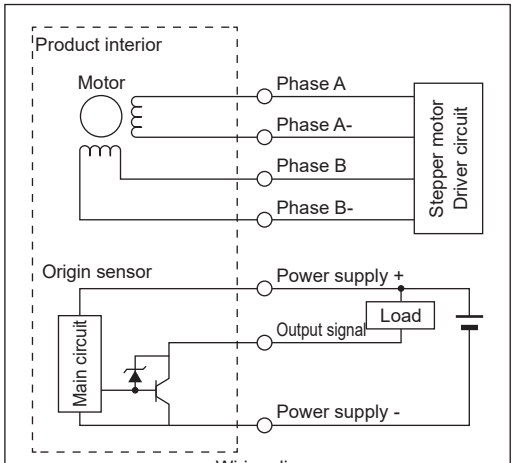

Wiring diagram

Insulator color	Access point
Green	Motor Phase A
Yellow	Motor Phase A-
White	Motor Phase B
Red	Motor Phase B-
Orange	Origin sensor Power supply +
Blue	Origin sensor Power supply -
Gray	Origin sensor Output signal
Black	NC

⚠ Always read the precautions and product specifications on Intro Pages 7 to 14 before use.

How to order

MNV 00 - 10BUP - 1 - G

❶ Model No. ❷ Connection ❸ Orifice size ❹ Fluid temperature

Code	Description
❶ Model No.	
MNV 00	
❷ Connection	
10BUP	Super 300 pillar fitting P series integrated 3/8"×1/4" Tube connection
❸ Orifice size	
1	ø3.4
❹ Fluid temperature	
G	20 to 195°C

Flow characteristics

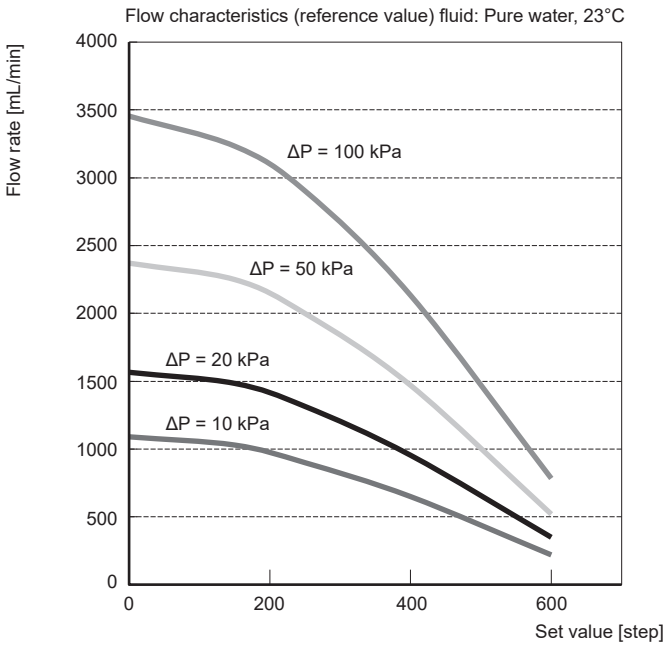

* The characteristics above are reference values. There are individual differences in the actual flow characteristics.

Dimensions

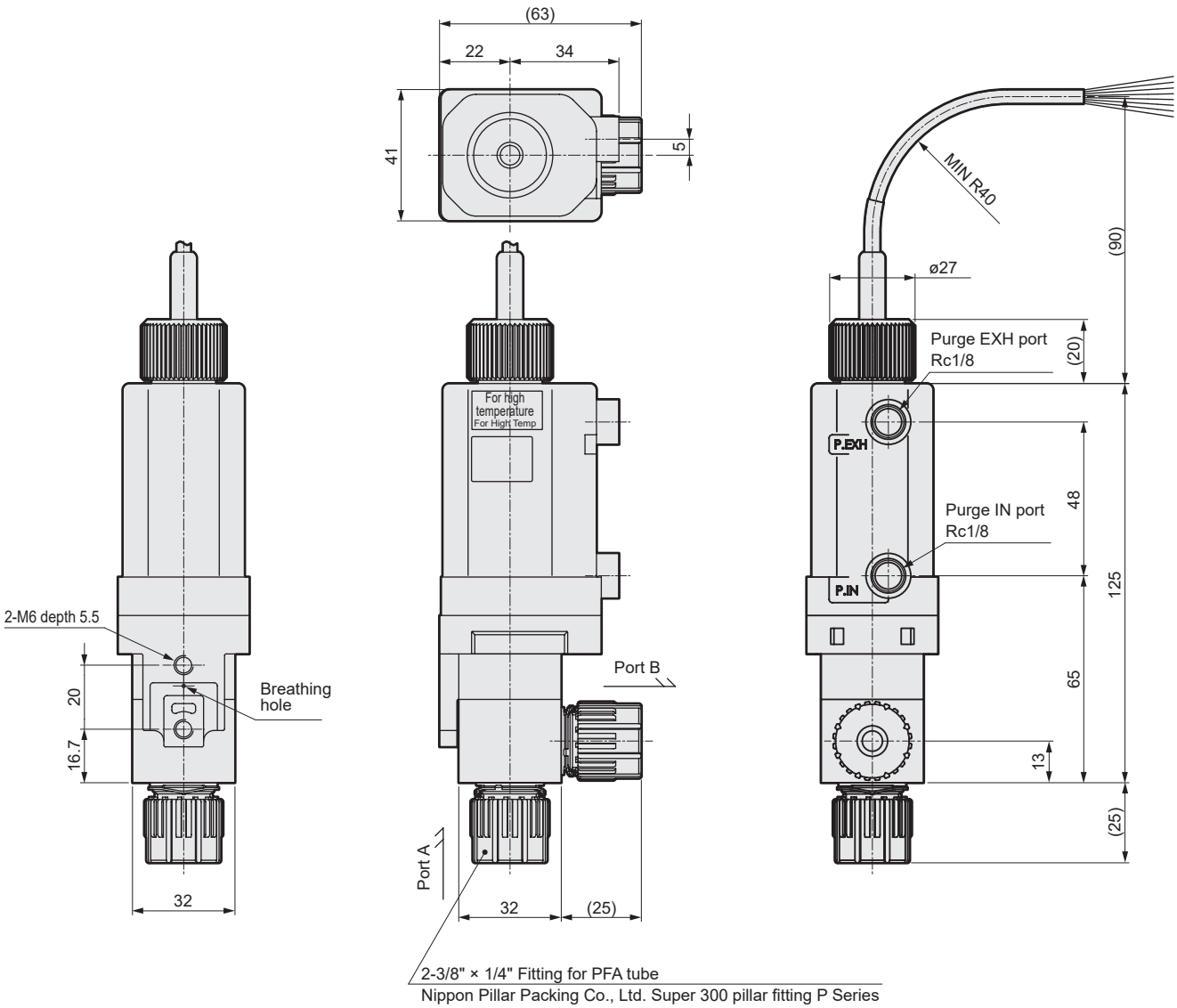

Flow rate adjusting valve

FMD00 Series

To support highly corrosive fluids,
Designed fine flow rate adjusting valve.
● Connection tube size: ø6, ø10, 1/4", 3/8"

RoHS

Specifications

Item		FMD00-*	FMD00-*-1
Working fluid		Pure water, chemical liquids, air, N_2 gas (*1)	
Fluid temperature	°C	5 to 80 (*2)	
Proof pressure	MPa	1	
Working pressure	MPa	0 to 0.3	
Ambient temperature	°C	0 to 40	
Mounting orientation		Unrestricted	
Connection		O.D. ø6 tube connection (integrated fitting) O.D. 1/4" tube connection (integrated fitting) O.D. ø10 tube connection (integrated fitting) O.D. 3/8" tube connection (integrated fitting)	
Orifice size		ø1.6	ø3.5
Weight	kg	0.11	

*1: Check the compatibility of product structural materials, working fluids and atmosphere.
*2: For use with hydrofluoric acid, or when the fluid temperature exceeds 40°C, consult with CKD.

How to order

FMD00 - 6UP - 1

Model No. ❶Connection ❷Orifice size

Code	Description	❶ Connection 6UP	8BUP	10UP	10BUP
		Super 300 Pillar fitting P series integrated			
		ø6 x ø4 tube connection	1/4" x 5/32" tube connection	ø10 x ø8 tube connection	3/8" × 1/4" tube connection
❷ Orifice size					
Blank	ø1.6	●	●	●	●
1	ø3.5	●	●	●	●

Applications

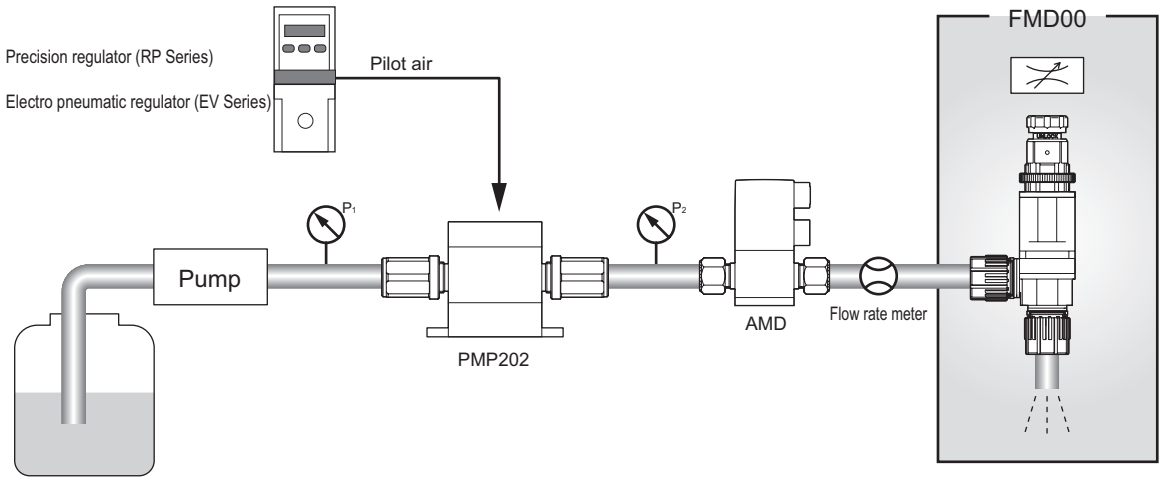

Flow characteristics ΔP0.1MPa fluid: Water (reference data)

● FMD00-8BUP (orifice size: ø1.6)

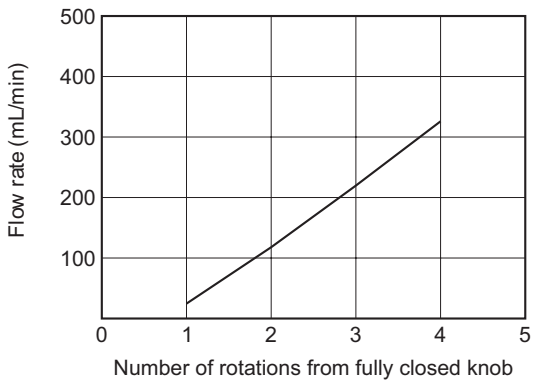

● FMD00-8BUP-1 (orifice size: ø3.5)

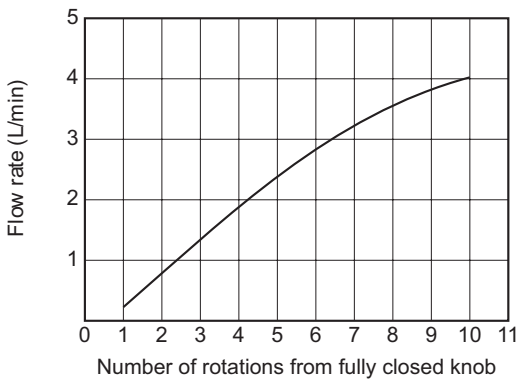

⚠ Always read the precautions on Intro Pages 7 to 14 before use.

Internal structure and Parts list / Dimensions

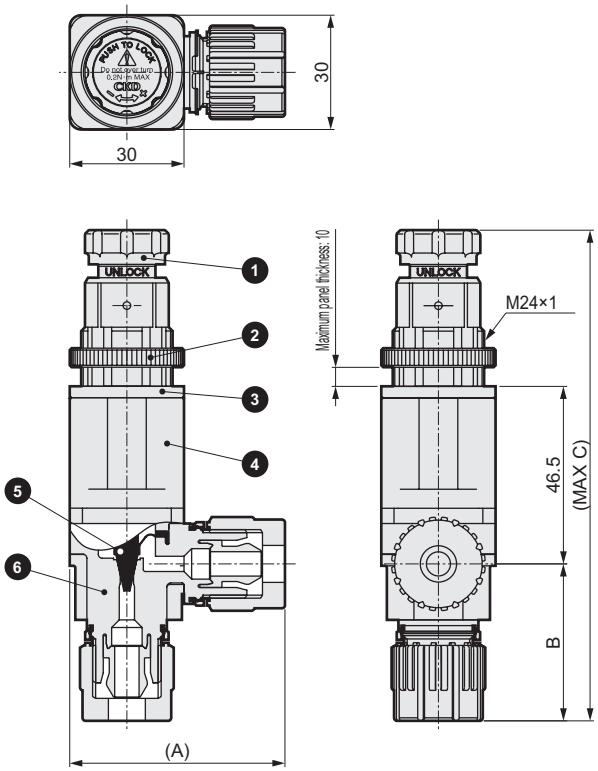

Part No.	Part name	Material
1	Knob	PP
2	Lock nut	PP
3	Gasket	FKM
4	Cover	PP
5	Diaphragm	PTFE
6	Body	PFA

The material and structure may vary depending on the model number. Contact CKD for details.

Connector No.	A	B	C
6UP	51	36	123
8BUP	51	36	123
10UP	57	42	129
10BUP	57	42	129

Operation mode of flow rate adjusting valve

When operating the flow regulating valve, be sure to adjust while checking the flow rate with the flow meter, and be careful not to turn the knob too much.
(The knob rotational torque should be 0.2 N·m or less)

- When increasing the flow rate
  Slide the knob up until you can see the word UNLOCK. (↑ **(1)**)
  [Unlocked]Turn the knob in the + direction.

- When decreasing the flow rate
  Slide the knob up until you can see the word UNLOCK. (↑ **(1)**)
  [Unlocked]Turn the knob in the - direction.

- Knob lock
  After operating the knob, you can lock the knob by sliding the knob down until the word UNLOCK cannot be seen.
  (↓ (2)) [Locked]
  → **This can prevent misoperation.**

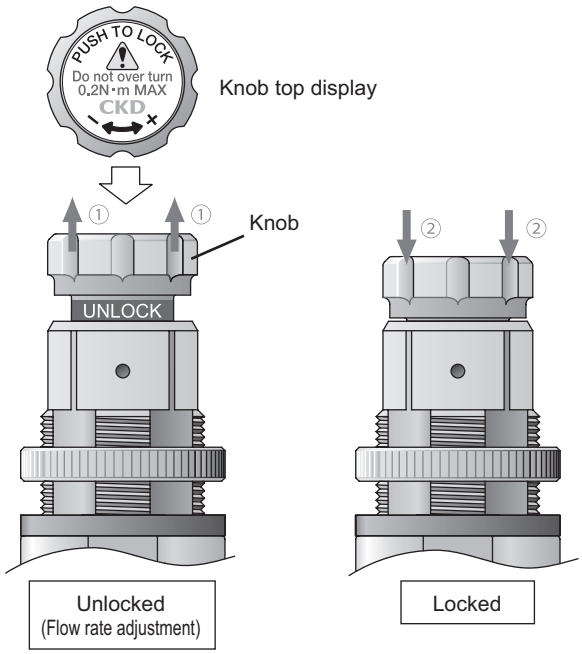

WARNING

Install the valve body to the equipment with the panel mount. If mounted only with fittings, the main body and piping/fitting may be damaged.

CAUTION

1 Flow rate configuration

- When operating the valve, operate the knob with rotational torque of 0.2 N·m or less. Operating with torque larger than 0.2 N·m may damage the product.
- When unlocking, do not pull the knob forcibly.
- When carrying this product, do not dangle it by the knob.
- For use, be sure to confirm that there is no vibration under actual use conditions. Vibration may reduce the product life.
- As this product does not have a sealing function, fluid cannot be sealed. To seal the fluid, use a valve with a sealing function. Sealing the fluid with this product may crush the valve seat and lower the flow controllability of the product.
- When set to a fine flow rate, the valve opening will also be very small. Therefore, if foreign matter is mixed into the fluid, the valve may clog and the flow rate may change.
- If there is a change in the fluid temperature, the valve opening may change due to volume expansion of the fluororesin and the flow rate may change.

MEMO

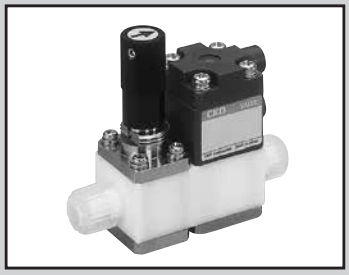

Fine flow rate adjusting valve Series

Separate the flow rate adjustment section and valve open/close function section

Realizing stable fine flow rate adjustment

● Connection tube size: ø 3, 1/8", Rc1/8

RoHS

Specifications

Item		LYX-0961-*	LYX-0965-*
Working fluid		Chemical liquid, pure water (*1)	
Fluid temperature	°C	5 to 60	
Proof pressure	MPa	0.6	
Working pressure	MPa	0 to 0.3	
Ambient temperature	°C	0 to 60	
Mounting orientation		Unrestricted	
Weight	kg	0.12	0.07

*1: Cannot be used with acidic fluids. Check the compatibility of product structural materials, working fluids and atmosphere.
*2: Refer to AMDZ on page 66 for specifications of the air operated valve.

Flow / Pressure characteristics

Flow characteristics comparison

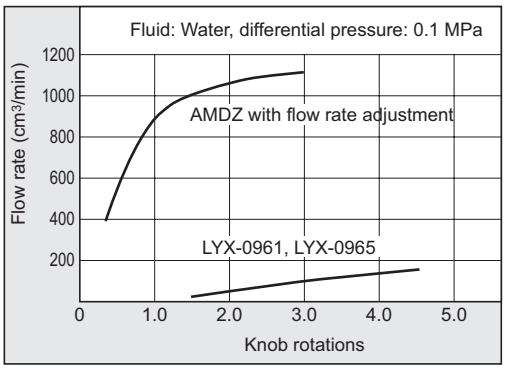

How to order

LYX - 0961 - 6BUS - 1

❶ Type

❶ Type	
0961	Air operated valve integrated
0965	Fine flow rate adjusting valve only (no valve closing function)

❷ Connection

❷ Connection		
6	Rc1/8	
3US	Super-type pillar integrated fitting	ø3 x ø2 tube connection
6BUS		1.8" x 0.086" tube connection
3UP	Super 300 Pillar fitting P Series	ø3 x ø2 tube connection
6BUP		1.8" x 0.086" tube connection
3UF	F-LOCK 20 Series integrated fitting	ø3 x ø2 tube connection
3UR	F-LOCK 60 Series integrated fitting	ø3 x ø2 tube connection
6BUR		1/8" × 1/16" tube connection

❸ Actuation
(Select only for LYX-0961)

❸ Actuation	
1	NC (normally closed)
2	NO (normally open)
3	Double acting

Internal structure and parts list

●LYX-0961

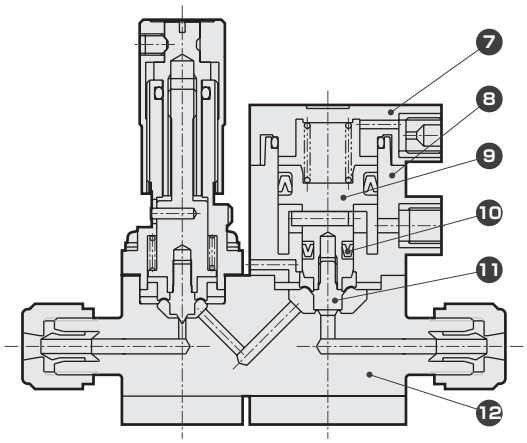

●LYX-0965

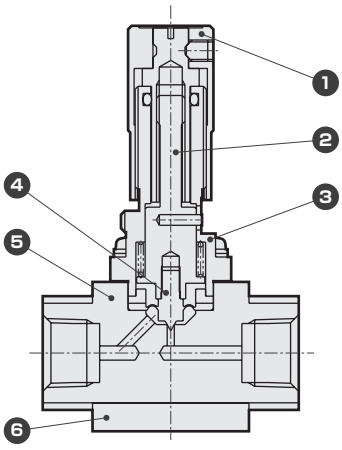

Part No.	Part name	Material
1	Adjusting knob	A5056
2	Lower rod	SUS304
3	Needle cover	SUS304
4	Diaphragm	PTFE
5	Body	PTFE
6	Mounting plate	SUS304
7	Cover	PPS
8	Cylinder	PPS
9	Piston rod	SUS303
10	Y packing	NBR
11	Diaphragm	PTFE
12	Body	PTFE

The material and structure may vary depending on the model number. Contact CKD for details.

⚠ Always read the precautions on Intro Pages 7 to 14 before use.

Dimensions

●LYX-0961-6BUS-1

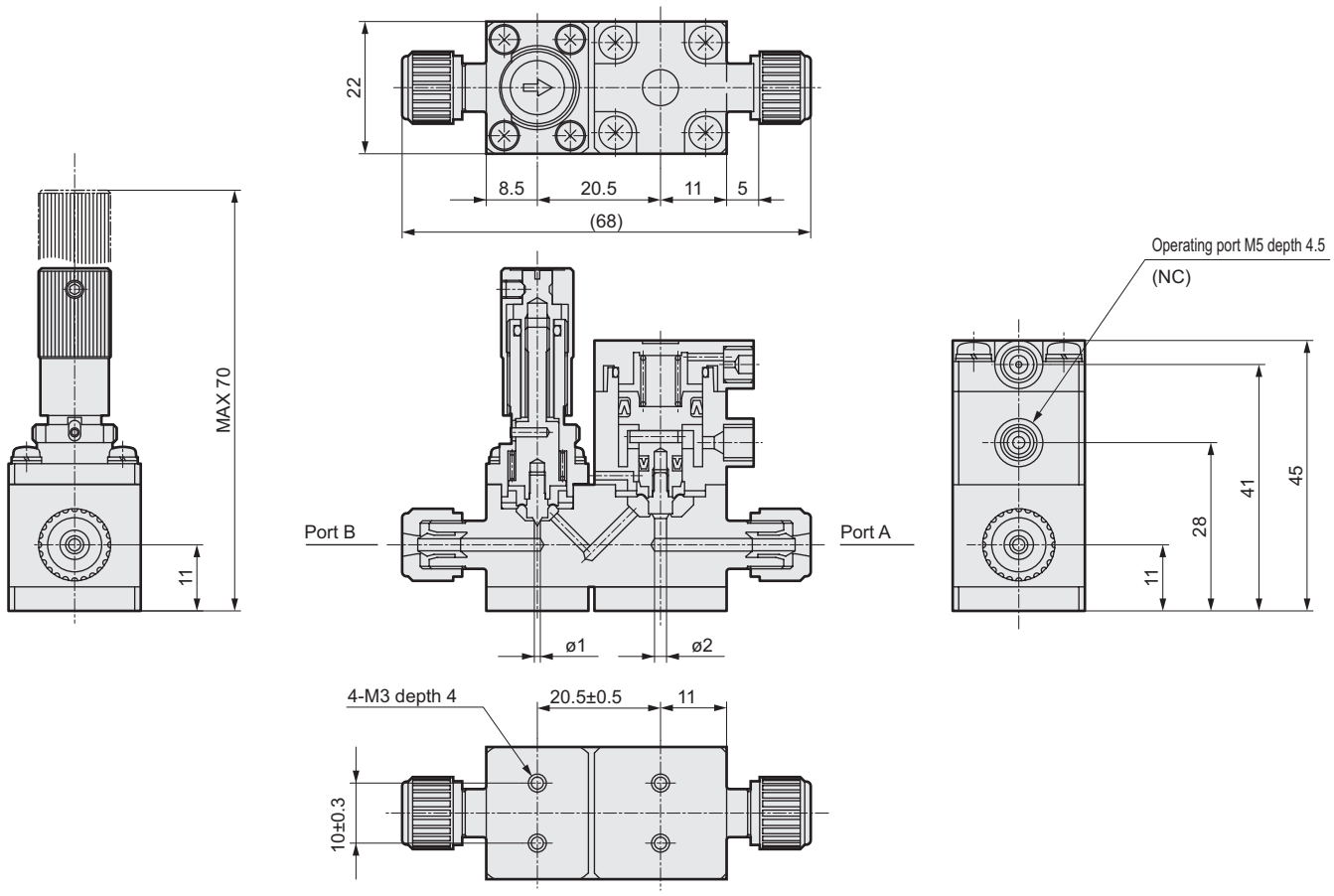

●LYX-0965-6

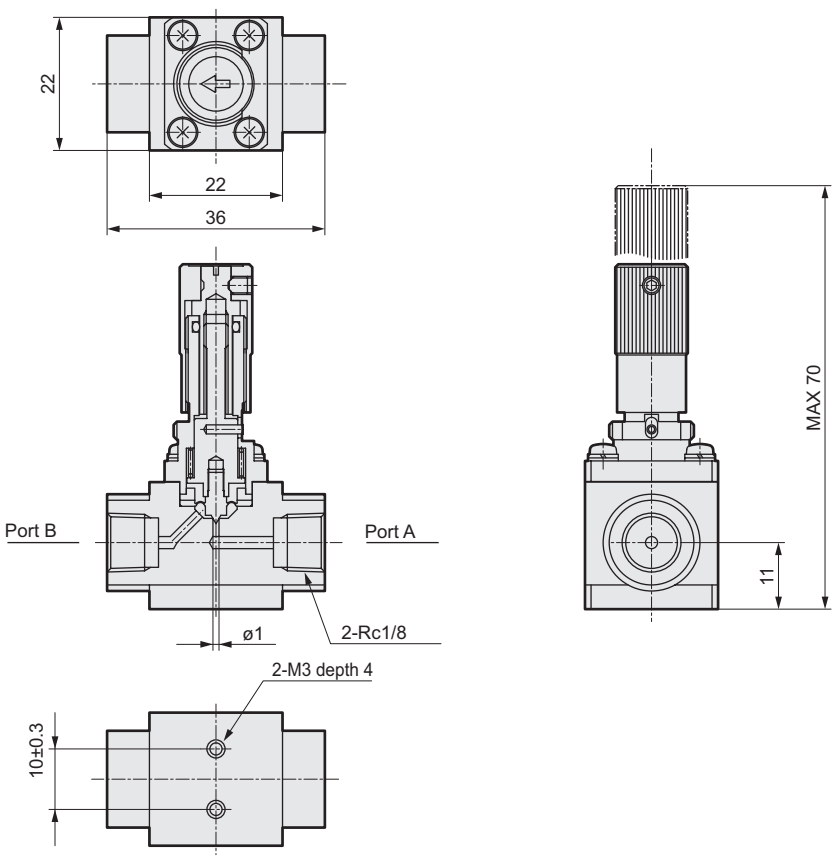

MEMO

Fine level switch

Overview

Detects with high accuracy the level of pure water and corrosive fluids including acids, alkalis and solvents, and outputs electrical signals.

Features

KML703

●Detection point: 8 points

●Remote operation available

Since the sensor and display are separated, it is possible to install the operation display away from the liquid bath. Furthermore, the built-in communication function (RS485) allows operation from the host computer.

●Resistant to environmental pressure fluctuation

As the differential pressure method detects the pressure difference between the environmental pressure and water level, it is resistant to fluctuation in environmental pressure since the detection tube and environment detection tube are set in an environment with the same pressure.

●Detection flow rate setting not required

KML60

●Detection point: 4-point setting available

●It can be made into a mix manifold with KML50 (1-point detection)

●With the internal fixed flow orifice, detection flow rate settings are rendered unnecessary.

KML50

●High precision level detection (±1 mm)

●Excellent installability

●Select models made of material with high corrosion resistance according to the ambient atmosphere.

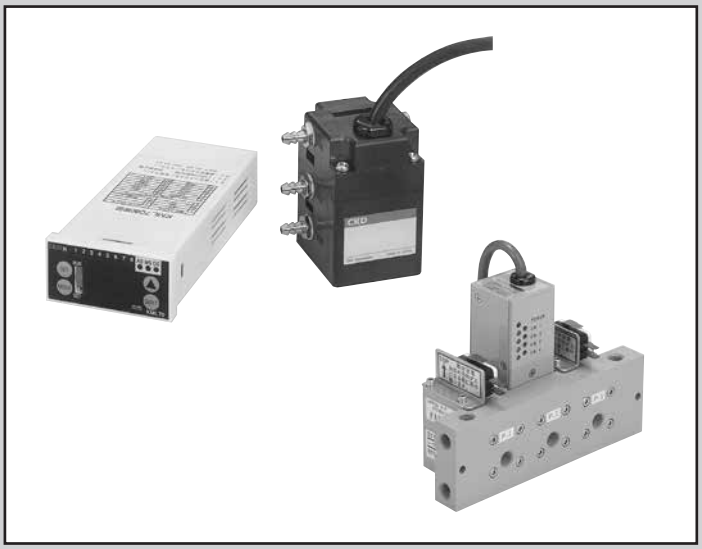

Safety precautions	Intro Page 9
Pilot-type	
KML703	184
KML60 MXKML	188
KML50 MKML	192

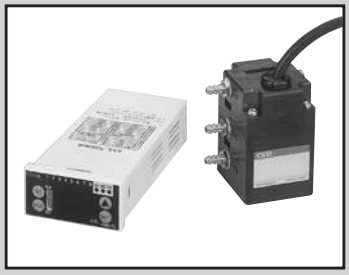

Digital fine level switch

KML703 Series

No need to set the flow rate to be detected
Resistant to environmental pressure fluctuation (differential pressure method)
Remote operation enabled and communication function (RS485) built in

RoHS

Specifications

Item		KML703-G-485	KML703-D-485
Detection		Gauge pressure method	Differential pressure method
Working fluid		Clean air, N_2 (*1)	
Working pressure	kPa	10 to 30	
Fluid temperature	°C	5 to 50	
Ambient temperature	°C	5 to 50	
Proof pressure	kPa	Working pressure: 100	
		Detection pressure: 10	
Detection water level	mm	1 to 700 (*2)	
Environmental pressure fluctuation	kPa	-	Within ±3 (Confirm that detection tubes are in same pressure environment.)
Consumption flow rate	Ncm^3/min	70 or less	140 or less
Monitor output		4 to 20 mADC (load resistance: 200 to 550 Ω)	
Power supply voltage		24 VDC ±10%, voltage ripple rate 1% or less	
Current consumption	mA	130 or less (when using 24 VDC)	
Switch output		NPN open collector 8-point (CH1 to CH6 contact a, CH7 to CH8 contact b) (30 VDC 50mA or less)	
Insulation resistance	MΩ	100 or more (500 VDC for 1 minute)	
Withstand voltage		Commercial frequency 500 VAC, 1 minute	
Repeatability	mm	±3 (10 minutes after power on) (*2)	
Hysteresis	mm	1 to 10 setting (*2)	
Response time	ms	600 or less (supply pressure: 20 kPa, detection tube I.D.: ø4 mm, length: 5 m)	
Temperature characteristics	mm/°C	Within ±1.2 (detection fluid: water)	
Detection tube I.D.	mm	4	
Detection tube length	m	Within 5	
Weight	kg	0.51	

*1: Use a filter with a degree of filtration of 0.3 μm or more.
*2: The specifications above include fluid pressure of 20kPa, power supply voltage 24 VDC, ambient temperature of 20°C, detection pipe inner diameter of ø4 × length of 5 m, Values when the specific gravity setting value is 1 and the nozzle mounting height is 0. The detection fluid is water.

Safety precautions

1. Install the switch at a position higher than the liquid level to be detected.
2. Use piping with a ø4 mm bore for detection. Do not install anything that will create resistance, such as a throttle, in the middle of the piping.
3. Detection in sealed liquid tanks and similar liquid tanks is not possible.
4. Do not block the detection pipe and detection port with a valve, etc. Supply pressure will be directly applied to the sensor chip, which may cause damage.
5. Use pneumatic pressure with dust and oil filtered out through a submicron filter and micro alescer.
6. Do not stop the supply pressure. The chemical liquid atmosphere may flow back from the detection tube to the sensor and cause adverse effects.
7. With the gauge pressure method, leave the EXH port open and do not block it with a plug, etc.
8. This product cannot be used in an atmosphere where chemical liquid is present.

Always read the precautions on Intro Pages 7 to 14 before use.

How to order

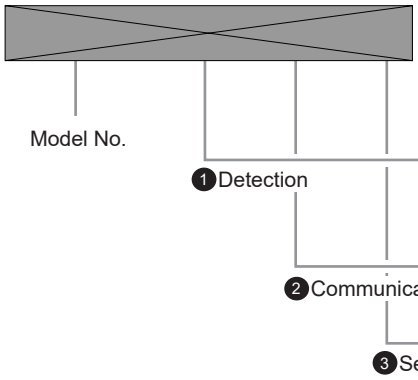

Code	Description
❶ **Detection**	
G	Gauge pressure method
D	Differential pressure method
❷ **Communication**	
485	RS485 communication
❸ **Sensor cable length**	
Blank	Sensor cable 5 m
3	Sensor cable 3 m

[Example of model No.]

KML703-G-485

Model KML703
❶Detection : Gauge pressure method
❷Communication : RS485 communication
❸Sensor cable length : 5 m

●Option (bracket/cable)

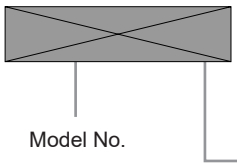

Code	Description
❶ **Option**	
B	Bracket for sensor body
P	Power supply cable (3 m)
O	Output cable (3 m)

Piping example

●Gauge pressure method

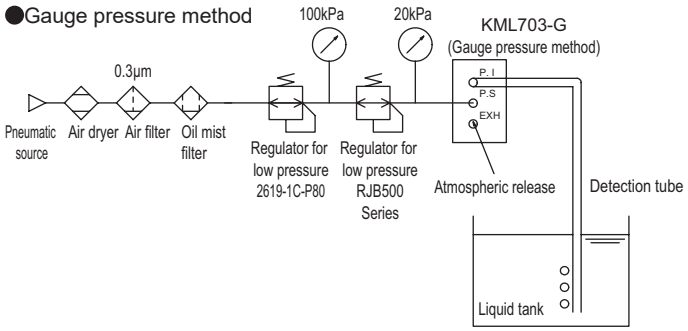

●Differential pressure method

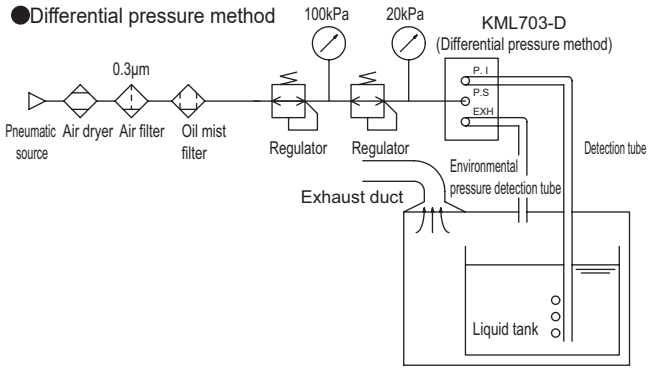

Internal structure and main part materials / Dimensions

● Sensor body

・KML703-G-485

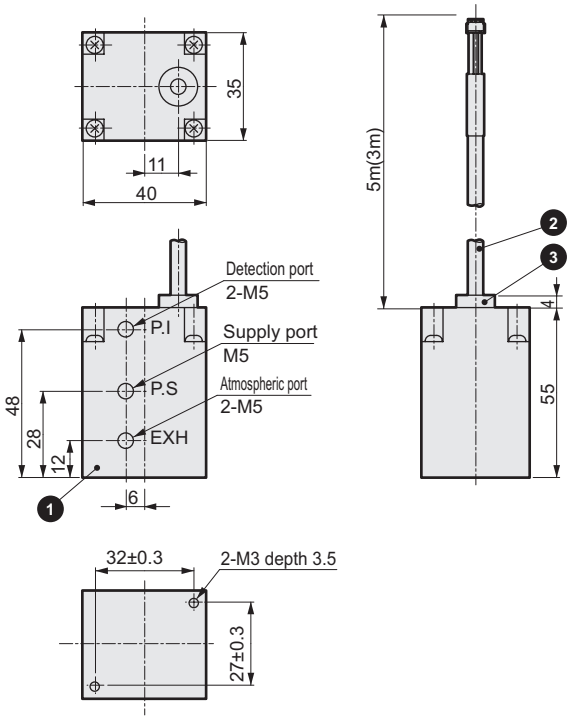

・KML703-D-485

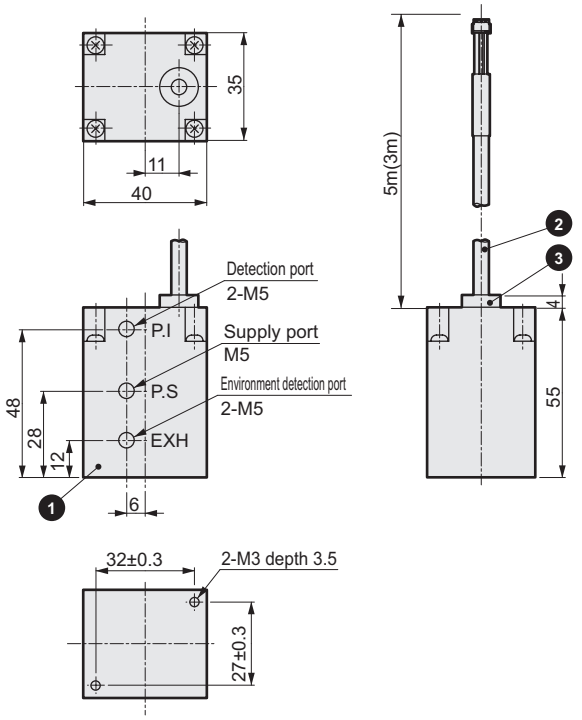

● Nipple, plug, gasket (accessory)

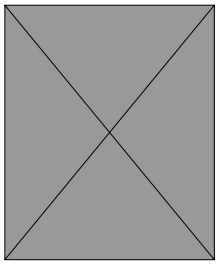

There are two PI and EXH ports on the front and back of this product. For unused ports, install the attached plugs to prevent leakage.

* With the gauge pressure method, leave the EXH port open and do not attach a plug.

Gauge pressure method

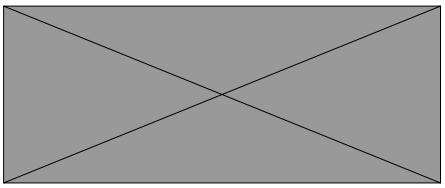

Differential pressure method

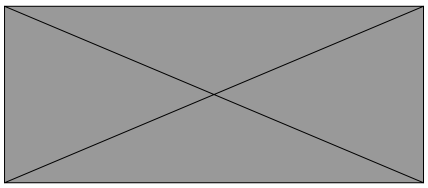

● Bracket for sensor body (option)

・KML703-B

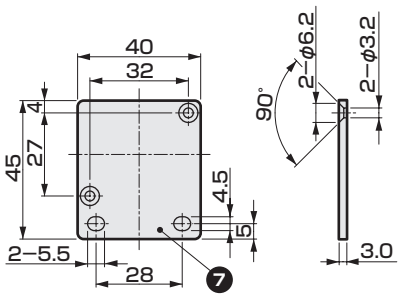

* For mounting brackets, 2 flat head machine screws are included

Part No.	Part name	Material
1	Body	PPS
2	Sensor cable	PVC
3	Bush	PA
4	Nipple	SUS304
5	Plug	SUS304
6	Gasket	PTFE
7	Bracket	SUS304

Internal structure and main part materials / Dimensions

● Indicator

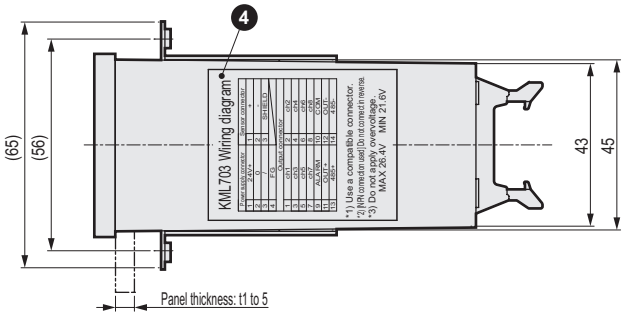

Part No.	Part name	Material figure No.
1	Front panel	
2	Case	PBT
3	Mounting bracket	SUS304
4	Wiring indication nameplate	
5	Serial nameplate	

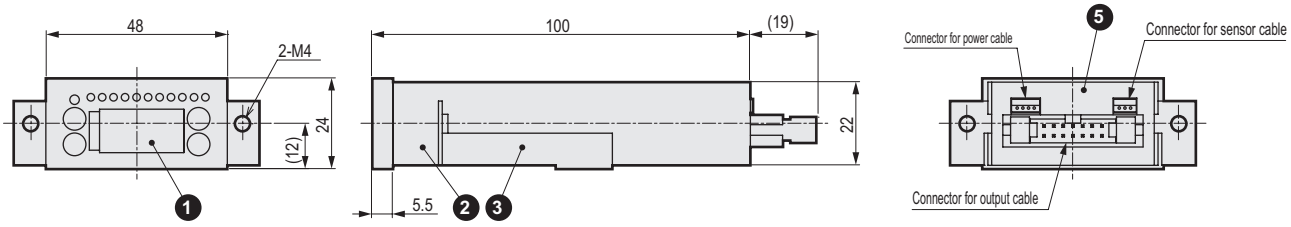

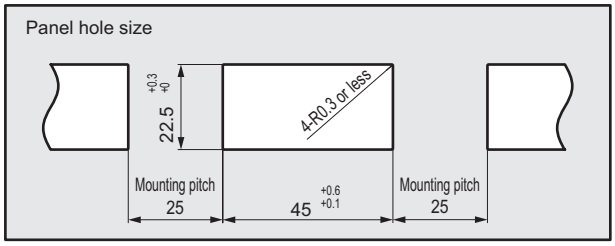

● Power cable (option)
・KML703-P

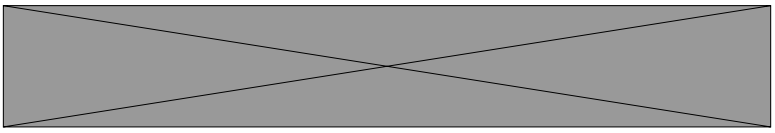

● Output cable (option)
・KML703-O

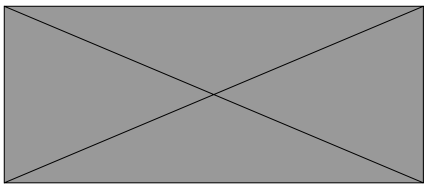

Wiring connection diagram

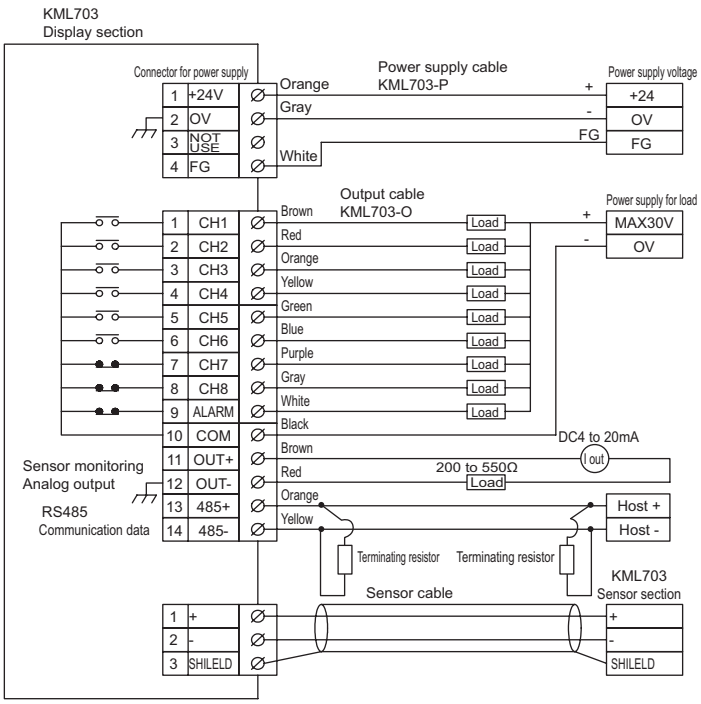

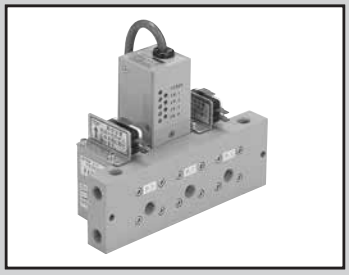

Fine level switch

KML60 Series

With one detection tube, detects liquid level at 4 points

RoHS

Specifications

Item		KML60-4	
Working fluid		Air, N_2 (*1)	
Working pressure	kPa	10 to 30 (when the set water level is 10 to 500 mm and water is used as the detection fluid)	
		15 to 30 (when the set water level is 10 to 1,000 mm and water is used as the detection fluid)	
Fluid temperature	°C	5 to 50	
Ambient temperature	°C	5 to 50	
Proof pressure	kPa	Working pressure	100
		Detection pressure	20 (where detection water level is 2,000 mm)
Detection water level	mm	10 to 1000 (*2)	
Power supply voltage		12 to 24 VDC ±10% Voltage ripple rate 5% or less	
Current consumption	mA	40 or less (when using 24 VDC)	
Switch output		NPN open collector 4-point (DC28V 80mA or less)	
Insulation resistance	MΩ	100 or more (500 VDC for 1 minute)	
Withstand voltage		Commercial frequency 500 VAC, 1 minute	
Repeatability	mm	±10 (10 minutes after power on) (*2)	
Hysteresis	mm	4 or less (set water level 10 to 200 mmH_2O) 20 or less (set water level 200 to 1000 mmH_2O) (*2)	
Response time	ms	600 or less (supply pressure: 20 kPa, detection tube I.D.: ø4 mm, length: 5 m)	
Temperature characteristics	mm/°C	±1.2	
Detection tube I.D.	Ø mm	4	
Detection tube length	m	Within 5	
Weight	kg	0.23	

*1: Use fluid passed through a filter with a Degree of filtration of 0.3 μm or more.
*2: The above specifications are values obtained in the following usage conditions: fluid pressure: 20kPa, power supply 24 VDC: 20°C. The detection fluid is water.

Safety precautions

1. Install the switch at a position higher than the liquid level to be detected.
2. Use pneumatic pressure with dust and oil filtered out through a submicron filter and micro alescer.
3. Use a low-pressure regulator with oil-free processing.
4. Use piping with a ø4 mm bore for detection. Do not install anything that will create resistance, such as a throttle, in the middle of the piping.
5. Eight P/S ports are provided on the manifold. Perform masking for piping ports that are not used.
6. Detection in sealed liquid tanks and similar liquid tanks is not possible.
7. Do not block the detection pipe and detection port with a valve, etc. Supply pressure will be directly applied to the sensor chip, which may cause damage.
8. When using a mix manifold with the KML50 Series, refer to the Safety Precautions for the KML50 Series.
9. Do not stop the supply pressure. The chemical liquid atmosphere may flow back from the detection tube to the sensor and cause adverse effects.
10. This product cannot be used in an atmosphere where chemical liquid is present.

Internal structure and parts list

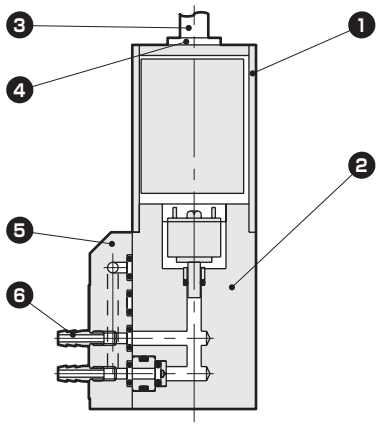

Part No.	Part name	Material
1	Cover	PVC
2	Base	PVC
3	Sensor cable	PVC
4	Bush	Nylon 66
5	Manifold	PVC
6	Nipple	SUS304

Applications

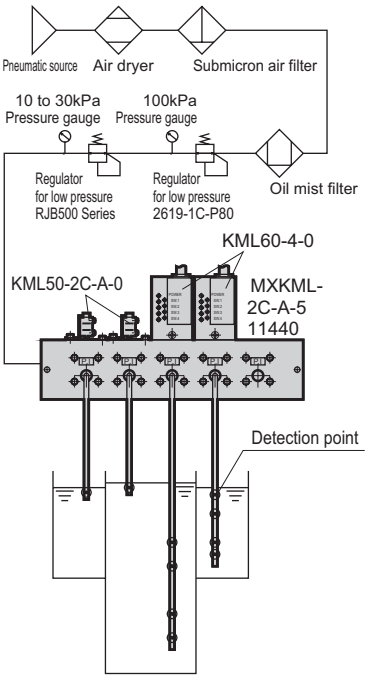

Always read the precautions on Intro Pages 7 to 14 before use.

How to order

●Single unit

KML60 - 4 R - 0

Model No.

❶No. of output points

❷Setting trimmer operation indicator lamp direction

❸Mounting

Code	Description
❶ No. of output points	
4	4-point setting
❷ Setting trimmer operation indicator lamp direction	
Blank	P.I. port side
R	P.I. port rear side
❸ Mounting (*1)	
Blank	Single unit
0	Single unit for manifold

*1: ❸When installing the Item 0 product to the manifold sub-base, the two supply ports on the top of the manifold sub-base cannot be used. When using the ports on the top surface with an existing manifold, change to other supply ports.

[Example of model No.]

KML60-4R-0

Model KML60

❶No. of output points : 4 points

❷Setting trimmer operation indicator lamp direction : P.I. port rear side

❸Mounting : For sub-plate mounting

●Manifold End of production November 2024

MXKML - 1C-A - 3 - 104 - R

Model No.

❶KML50 combination model No.

❷Number of sub-plates

❸Manifold switch array

❹Setting trimmer operation indicator lamp direction

Code	Description
❶ KML50 combination model No.	
00-0	No KML50 combination
1C-A	KML50-1C-A-0 combined
1C-B	KML50-1C-B-0 combined
2C-A	KML50-2C-A-0 combined
2C-B	KML50-2C-B-0 combined
0A-A	KML50-0A-A-0 combined
0A-B	KML50-0A-B-0 combined
1B-A	KML50-1B-A-0 combined
2B-A	KML50-2B-A-0 combined
2B-B	KML50-2B-B-0 combined
❷ Number of sub-plates	
1	1 station
2	2 stations
3	3 stations
4	4 stations
5	5 stations
❸ Manifold switch array (*1, *2, *3, *4)	
0	Masking
1	KML50 specified in Item ❶
4	KML60-4-0
❹ Setting trimmer operation indicator lamp direction	
Blank	P.I. port side
R	P.I. port rear side

*1: Specify the switch array on the manifold with an array of numbers 0, 1 and 4.
*2: Specify the array from the left front side of the manifold (P.I. port side).
*3: Specify with the same number of digits as the number of sub-plate stations specified in "Item ❷".
*4: When masking, be sure to specify 0 in the masking position.

[Example of model No.]

MXKML-1C-A-3-104-R

Model MXKML

❶KML50 combination model No. : KML50-1C-A-0

❷Number of sub-plates : 3 stations

❸Manifold switch array : From the front left, arrange in the order of KML50-1C-A-0, masking and KML60-4-0

❹Setting trimmer operation indicator lamp direction : P.I. port rear side

Dimensions

● KML60-4

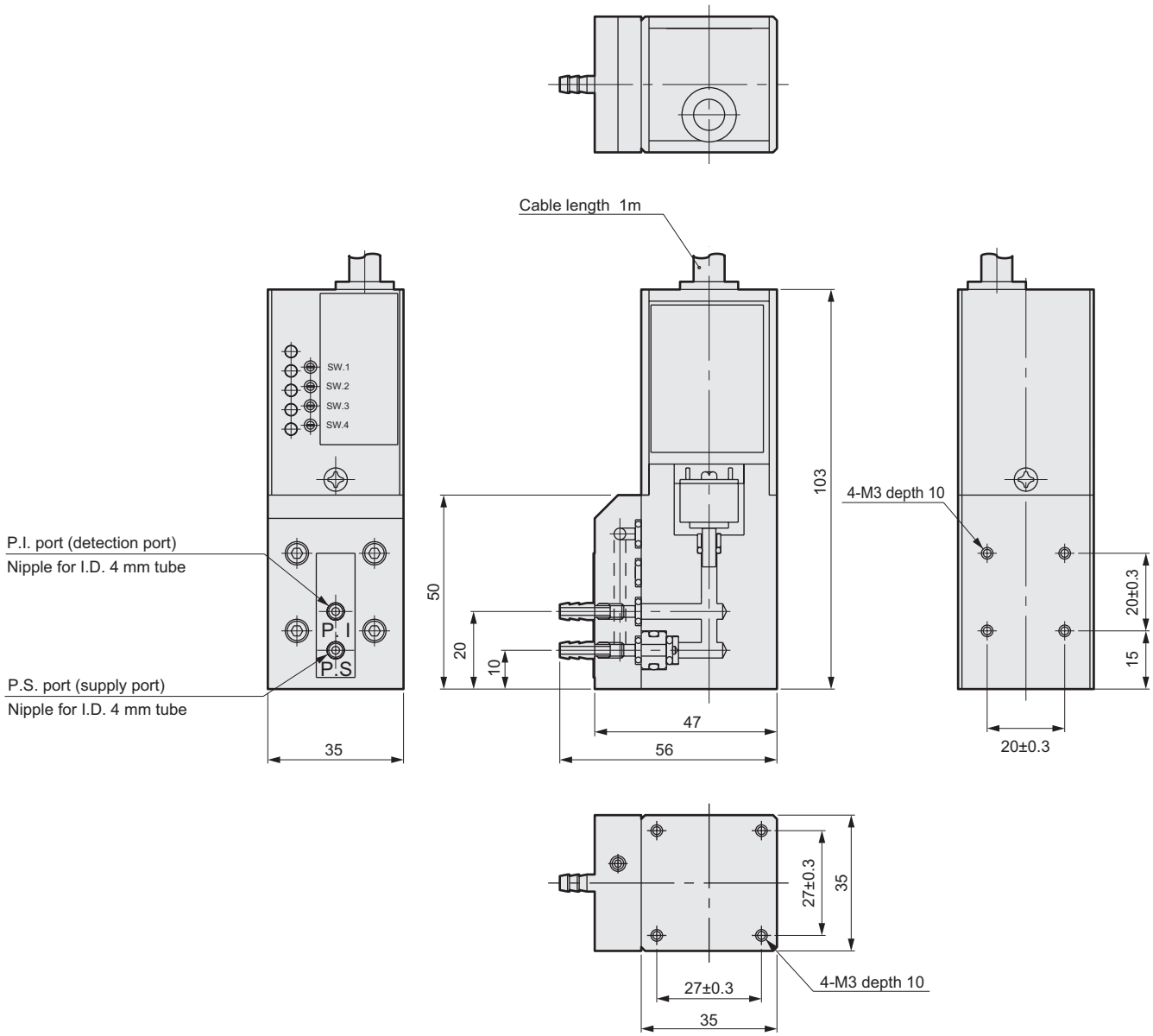

Dimensions

● MXKML-0A-A-*-* (manifold) End of production November 2024

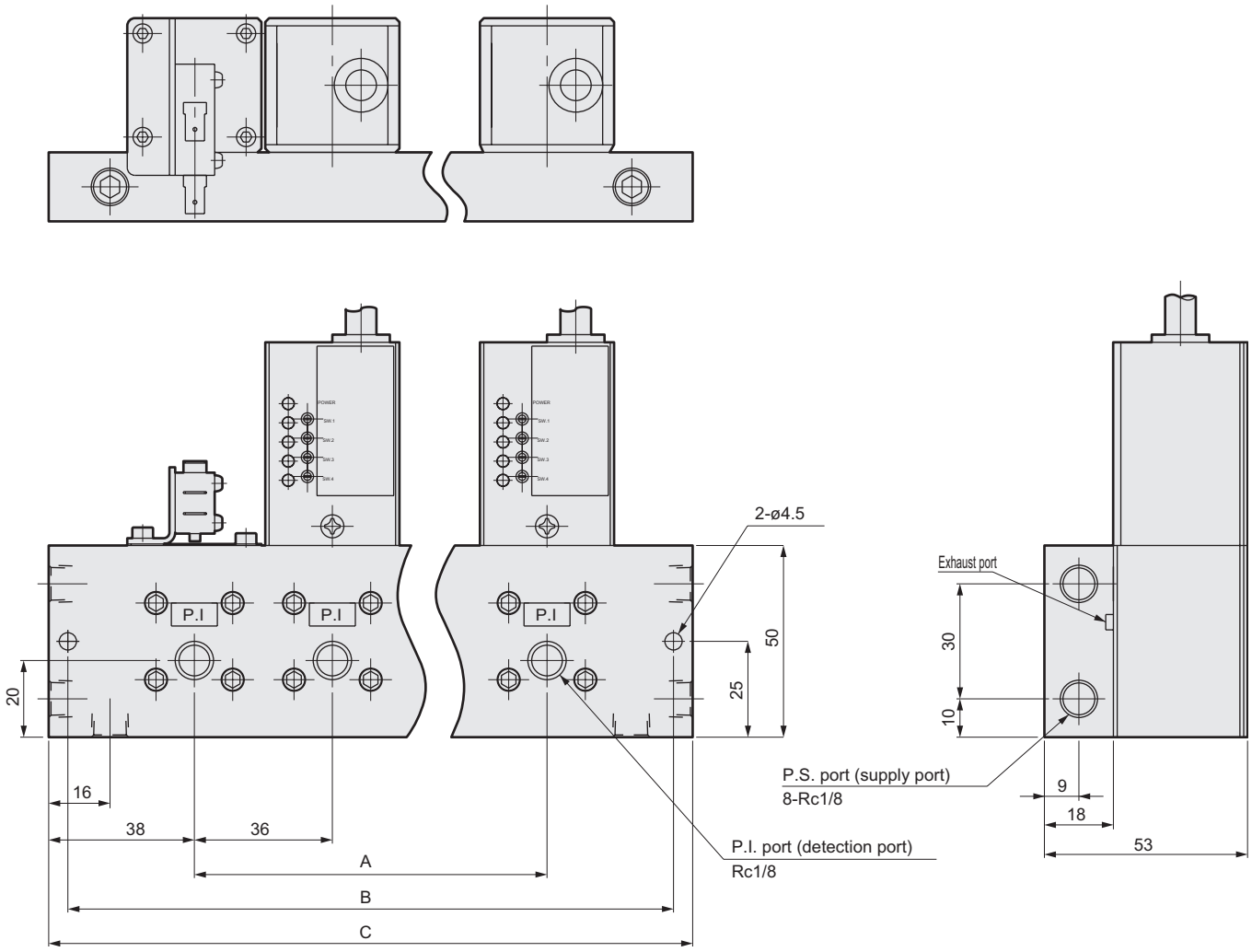

Number of sub-plates	A	B	C
1	-	66	76
2	36	102	112
3	72	138	148
4	108	174	184
5	144	210	220

Wiring connection diagram

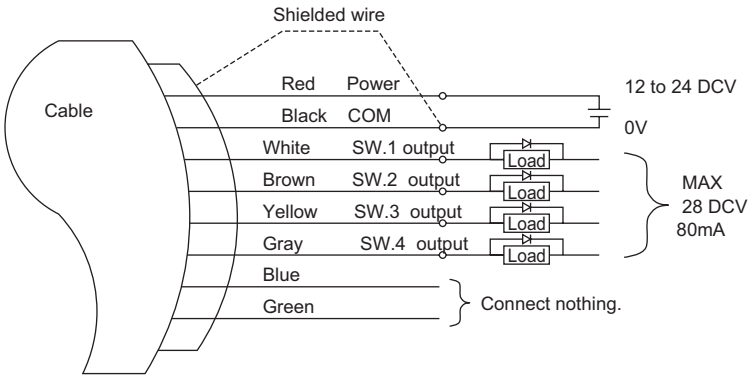

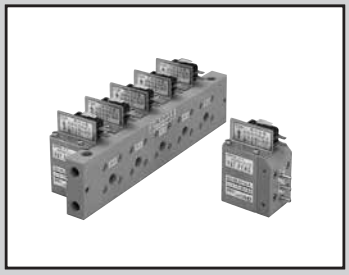

Fine level switch

KML50 Series

Boasting detection precision of ±1 mm and excellent installability
Liquid level detector

End of production November 2024

Specifications

Item		KML50-0A-$^{A}_{B}$	KML50-1$^{B}_{C}$-$^{A}_{B}$	KML50-2$^{B}_{C}$-$^{A}_{B}$
Working fluid		Air, N_2		
Working pressure kPa		15 to 35	10 to 30	
Fluid temperature °C		5 to 60		
Ambient temperature °C		15 to 40	5 to 60	
Proof pressure kPa		50		
Detection water level mm		8 to 100	1 to 600	
Contact capacity	A type	3 A 125 V / 250 VAC resistance load (micro switch)		
	B type	0.25 A 100 VDC resistance load (reed switch)		
Switching Water level: mm	Switching point	8 to 12 (*1)	8 to 12 (*1)	1 to 3 (*1)
	Hysteresis	5 or less (*1)	2 or less (*1)	2 or less (*1)
Repeatability mm		±1		
Response time ms		200 or less (detection flow rate 75cm³/min (ANR), detection tube I.D. ø4 mm, length 2 m)		
Detection tube I.D. Ø mm		4		
Detection tube length m		Up to 2		
Air consumption cm³/min (ANR)		750 or less (at supply pressure of 20 kPa)		
Weight kg		0.19	KML50-1B-* 0.27	KML50-2B-* 0.27
			KML50-1C-* 0.19	KML50-2C-* 0.19

*1: The above specifications are values obtained at supply pressure 20 kPa (ambient temperature: 24 ±2°C).
Be sure to use supply pressure with a high degree of cleanliness. Value obtained with measured water.
*2: Micro switch is C contact and reed switch is A contact.

Safety precautions

1. Install the switch at a position higher than the liquid level to be detected.
2. Use pneumatic pressure with dust and oil filtered out through a submicron filter and micro alescer.
3. Use a low-pressure regulator with oil-free processing.
4. Water or a fluid of similar viscosity is used to adjust before shipping.
5. Use piping with a 4 mm bore ø for detection. Do not install anything that will create resistance, such as a throttle, in the middle of the piping.
6. Eight P/S ports are provided on the manifold.
Perform masking for piping ports that are not used.
7. Detection in sealed liquid tanks and similar liquid tanks is not possible.
8. Applying a pressure of 50 kPa or more to the PS port may cause damage. Gradually raise the pressure from 0.
9. With the switch section facing up, install at a position higher than the liquid level.
10. The needle is adjusted before shipping and should not be readjusted.
11. If the EXH port is blocked, excess pressure may be applied inside the product which may cause damage, so be sure to leave the EXH port open.
12. Do not stop supplying the supply gas if corrosive gas may enter from the detection tube. The switch protects the detection part from corrosive gas by discharging the detection gas from the detection tube.
13. This product cannot be used in an atmosphere where chemical liquid is present.

Internal structure and parts list

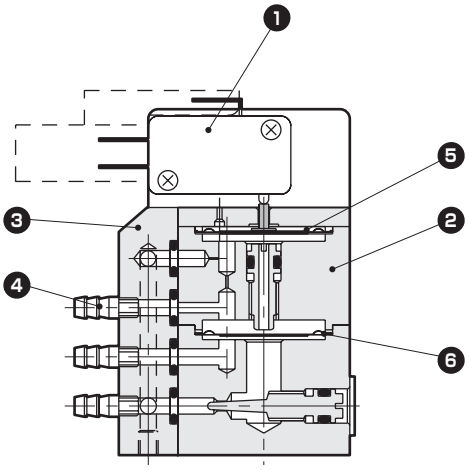

Part No.	Part name	Material (by material combination)		
		A	B	C
1	Micro switch	—		
2	Body	PVC	A6063	PVC
3	Manifold	PVC	A6063	PVC
4	Nipple	SUS304		
5	Diaphragm A	U		
6	Diaphragm B	PTFE	U	U

Always read the precautions on Intro Pages 7 to 14 before use.

How to order

●Single unit

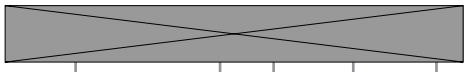

Model No.

❶Sensing classification

❷Material combination

❸Switch type

❹Option

Code	Description	
❶ Sensing classification	Switching point	Hysteresis
0 (*1)	8 to 12	5
1 (*1)	8 to 12	2
2 (*1)	1 to 3	2

❷ Material combination	Body	Diaphragm
A	PVC	PTFE
B	A6063	U (Urethane)
C	PVC	U (Urethane)

❸ Switch type	
A	Micro switch (C contact)
B	Reed switch (A contact)

❹ Option	
Blank	Single unit
0	Single unit for manifold

●Manifold

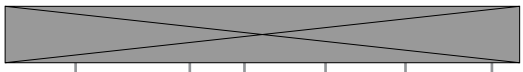

Model No.

❶Sensing classification

❷Material combination

❸Switch type

❹Number of sub-plates

❺Masking count

Code	Description	
❶ Sensing classification	Switching point	Hysteresis
0 (*1)	8 to 12	5
1 (*1)	8 to 12	2
2 (*1)	1 to 3	2

❷ Material combination	Body	Diaphragm
A	PVC	PTFE
B	A6063	U (Urethane)
C	PVC	U (Urethane)

❸ Switch type	
A	Micro switch (C contact)
B	Reed switch (A contact)

❹ Number of sub-plates	
1	One station
2	2 stations
3	3 stations
4	4 stations
5	5 stations

❺ Masking count	
0	No masking
1	1 mounted
2	2 mounted
3	3 mounted
4	4 mounted

Precautions for model No. selection

*1: When Item ❶ is 0, only A is available for Item ❷. When Item ❶ is 1 or 2, only B and C are available for Item ❷.

Dimensions

● KML50-0A-A

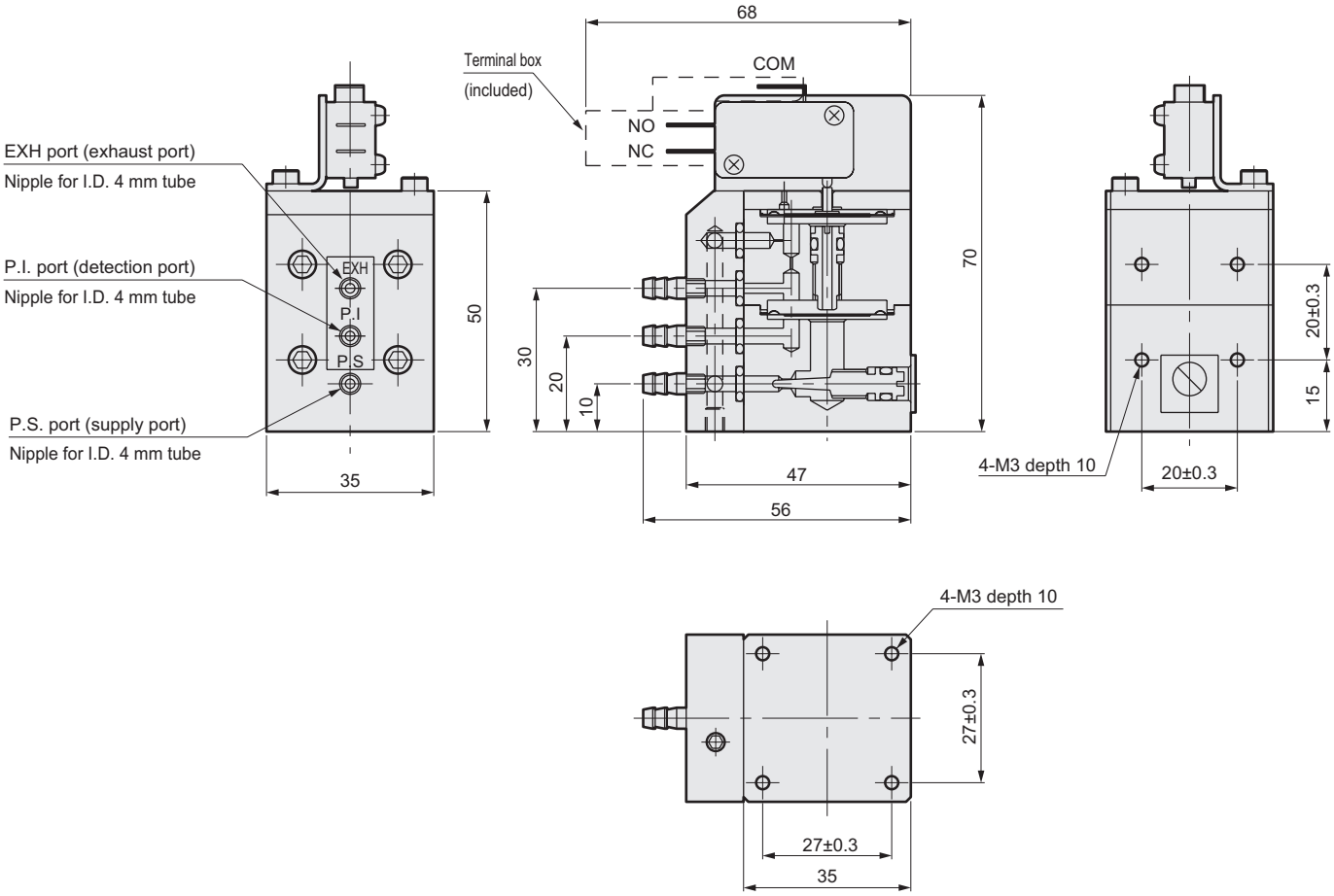

Dimensions

● MKML-0A-A-*-* (manifold)

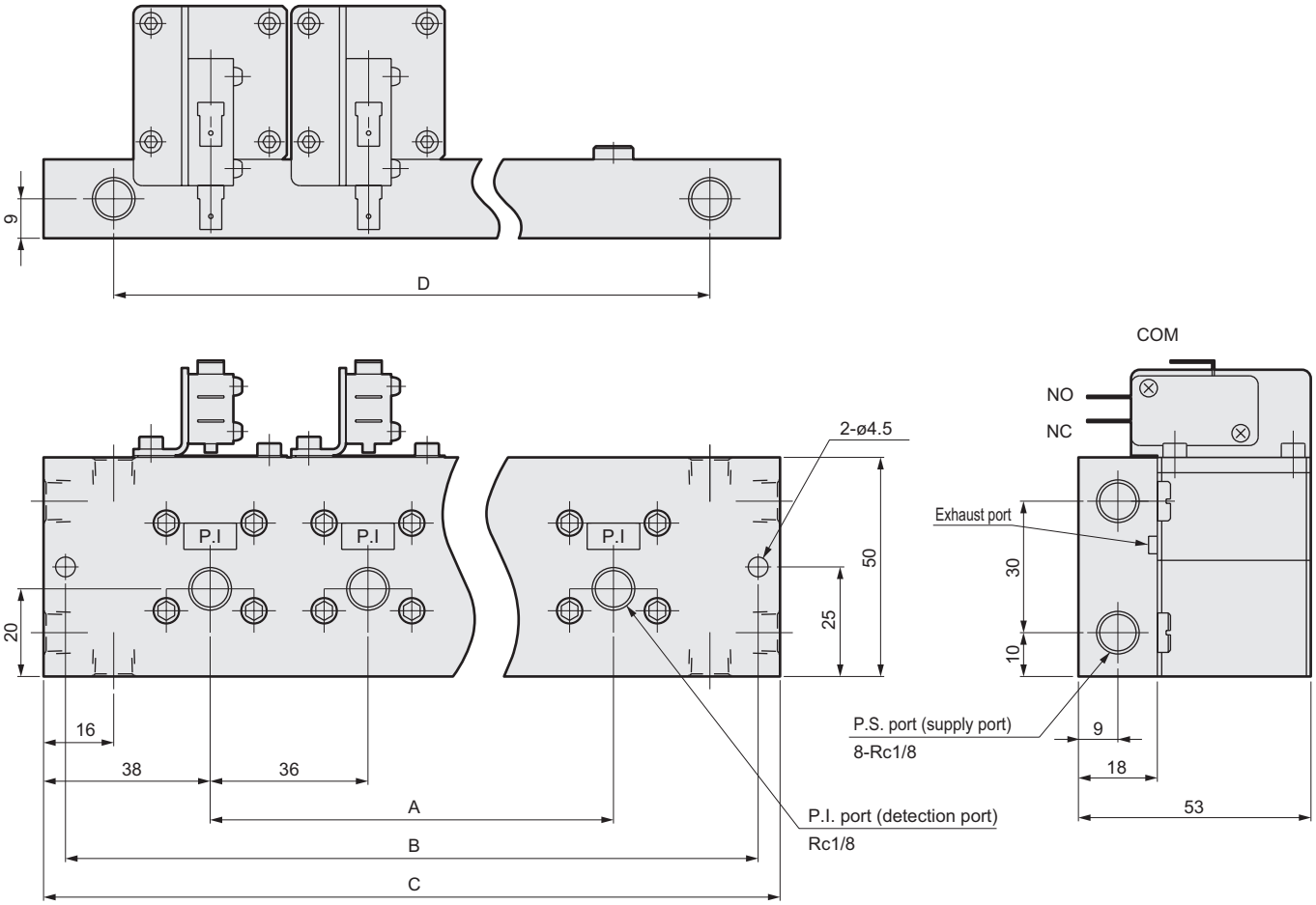

Number of sub-plates	A	B	C	D
1	-	66	76	44
2	36	102	112	80
3	72	138	148	116
4	108	174	184	152
5	144	210	220	188

MEMO

Related products

	Applications	Communication	
Solenoid valve for operation			
MN3E / MN4E	Air operated valve drive, etc.	CC-LINK DeviceNet EtherCAT EtherNet/IP	198
3QRA/B	Air operated valve drive, etc.		198
MN4GA/B R	Air operated valve drive, etc.	CC-LINK CC-Link IE Field Basic CC-Link IE Field DeviceNet PROFIBUS-DP PROFINET EtherCAT EtherNet/IP IO-Link	198
Electro-pneumatic regulator			
EVS2	Pilot regulator control		199
MEVT	Pilot regulator control	CC-LINK DeviceNet	199
EVR	Pilot regulator control		199
Clean regulator			
RC2000	Purge Air, N_2 pressure adjustment		200
Flow rate sensor			
FSM3	Purge Air, N_2 flow rate measurement	IO-Link	200
Auxiliary components			
Airfiber	Air operated valve drive		200
FCS	Purge Air, N_2 extraction		201

Solenoid valve for operation

Applications: Air operated valve drive, etc.

MN3E/MN4E Series

(3, 4-port valve, two 3-port valves integrated)

Compact (width of 7 or 10 mm) 3, 4-port valve block manifolds that are highly integrated and offer space-saving with high performance

●Compact and space saving
In addition to the MN3/4EO series with 10 mm valve block width type, MN3/4EOO with 7 mm valve lock width and 7 mm manifold pitch are now available. Helps to reduce device footprints. Can be installed anywhere. Individual wiring used for increased integration.

●Environmental preservation
Environment-friendly halogen-free lead wires have been adopted for internal wiring. (D-sub-connector T30-type)

●High performance
- 12 ms responsivity for balancing ports A and B
  (Our data value with two 3-port valves integrated)
- Cumbersome wiring work is not required
  With connector, wiring is completed at the same time as assembling.

●Diversity
A wide range of electrical connections such as serial transmission corresponding to various connectors and networks are available.

●Energy saving
MN3/4E0 Series: 0.6 W
MN3/4E00 Series: 0.4 W
With energy saving type (Option E), it further reduces power consumption.

Solenoid valve for operation

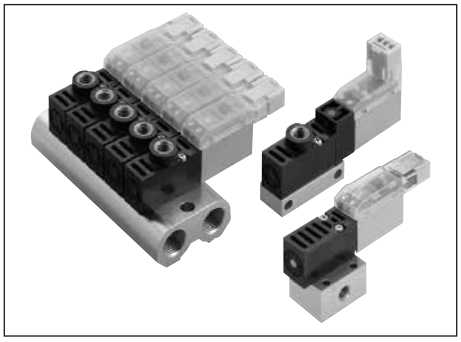

Applications: Air operated valve drive, etc.

3QRA/B Series

(3-port valve)

Realizes large flow rate/high-speed conversion

●Contributes to increased speed and optimization of equipment (downsizing and improved maintainability)
Durability 100 million cycles or more (as under CKD-regulated stringent test conditions)
Compact and lightweight 19 g (best weight) 10 mm (W) × 20 mm (H) × 46 mm (D)

●Enhanced flow rate and response time enable high-speed vacuum/atmospheric release
Large flow rate C: 0.4 (dm^3/s·bar) Large flow rate C: 0.3 (dm^3/s·bar) standard
High response 4±1ms/1.5±1ms (ON/OFF)

●Standard compliant for various applications. All ports from vacuum to positive pressure. Universally pressurizable
■Ozone resistance (rubber FKM used)
■RoHS command compliant
■Restricted copper materials (air passage, sliding part)

Solenoid valve for operation

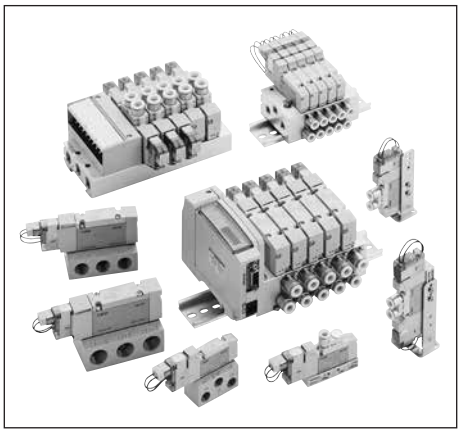

Applications: Air operated valve drive, etc.

MN4GA/B R Series

(3, 5-port valve)

General purpose valves support a wide range of needs

●Safety
Includes protective cover to prevent misoperation of the manual override due to external force, etc. Prevents malfunction of cylinders due to back pressure when using a single acting cylinder.

●Reliability
- Service life of 100 million cycles or more (at 0.5 MPa with clean air)
- Response 12 ms ± 2 ms (Our data for 4G1 Series)
  Thanks to the new sliding mechanism, reliability performance such as service life and responsiveness has definitely been upgraded.

●Easy to use
- Wiring connector upward/lateral common
  Just insert top-facing or side-facing. PAT.

●Energy savings: 0.35 W, 0.1 W (low exoergic/energy circuit)

●Diverse options
Eight-types available

●Wide range of communication methods
Supports ten-types of communication methods

Electro-pneumatic regulator

EVS2 Series

Compact, lightweight and high performance electro pneumatic regulator

- ●Compact, light-weight
  Compared with conventional models…Volume 20% reduced, weight 35% reduced
- ●Long service life
  Three times longer service life than our conventional model
- ●High precision/high-speed response
  0.3%F.S. repeatability, 0.1%F.S. resolution, 0.1sec response time (without load)
- ●2-color LED of the operating status
  At set pressure: Green
  Outside setting, at error: Red
- ●Easy to pipe/wire
  Push-in cartridge fitting and M12 connector are used.

Applications: Pilot regulator control

Electro-pneumatic regulator

MEVT Series

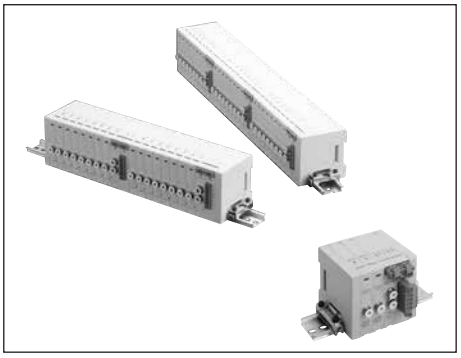

Thin electro-pneumatic regulator/manifold with PC control and reduced wiring

- ●14 mm thin and 80 g lightweight.
- ●Network-compatible.
- ●2-color LED of the operating status.
- ●Easy to pipe/wire.
- ●2 mounting directions.
- ●High precision and high response.
- ●Eco-friendly product.

Applications: Pilot regulator control

Electro-pneumatic regulator

EVR Series

Electro pneumatic regulator that focuses on accuracy and stability

- ●The optimum pressure for your device can be selected.
  Pressure variations: 9 variations are available from 100 kPa to 900 kPa.
- ●High-precision pressure control
  The new control method, with built-in microcomputer, achieves more advanced pressure control.
- ●Temperature stability
  Built-in temperature compensation reduces the influence of ambient temperatures. No need for pressure correction due to equipment temperature rise.
- ●Pressure stability
  Residual pressure 0 when the input signal is 0%
  The pressure control pattern can be selected (3 patterns)
- ●Easy operation
  Two switches allow various settings
  With operation indicator
- ●Installability
  Connectors: Straight and L-types are available
  Manifold is also usable

Applications: Pilot regulator control

Clean regulator

Applications: Purge Air, N_2 pressure adjustment

RC2000 Series

Ideal for pressure control of clean air and nitrogen

●Oil-prohibited specifications
Precision cleaning is performed on the gas contact parts, and the manufacturing processes from assembling to packaging are completed in clean rooms. No grease is used in gas-contacting parts.

●Compact/large flow rate
A large flow rate of 0.8 m^3/min. is realized even with just 50 mm inteface.
(Flow rate at 0.7 MPa primary pressure, 0.5 MPa set pressure, 0.1 MPa pressure drop)

●Reverse function (when back pressure is not applied)
This function reverses secondary pressure to the primary side when primary pressure is exhausted.
This safety-oriented product has no residual pressure on the secondary side.

Flow rate sensor

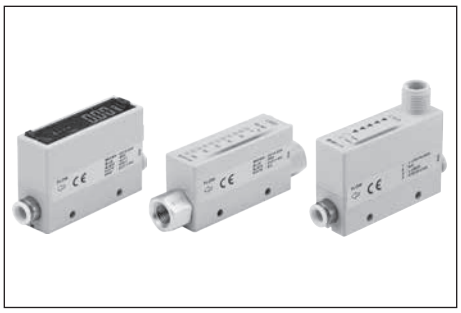

Applications: Purge Air, N_2 flow rate measurement

Compact flow rate sensor RAPIFLOW® FSM3 Series

Easy-to-use compact flow rate sensor with high performance and variety

●Stainless steel body
An oxygen-dedicated model is also available (oil-prohibited specifications)
Select from JXR fitting type, double barbed fitting type and screw-in type

●Resin body
Select from four fitting types: push-in elbow, push-in straight, screw-in elbow and screw-in straight
2-port valve can be directly connected, contributing to further space saving

●Common specifications
Flow rate range: Supports up to 1,000 L
Compatible with five types of gases in a single unit, including air, nitrogen, argon, carbon dioxide, and mixed gas
Integrating the needle valve helps save space

●High precision/high-speed response
Redesigned flow path reduces pressure loss by up to 50% compared to conventional products
The flow direction can be set to forward, bi-direction or reverse direction
Response time: 50 msec

●Automation of the entire factory using IO-Link
IO-Link compatibility allows parameter and event data transmission, enabling preventative maintenance.
Ideal for leakage inspection and air consumption control

Auxiliary components

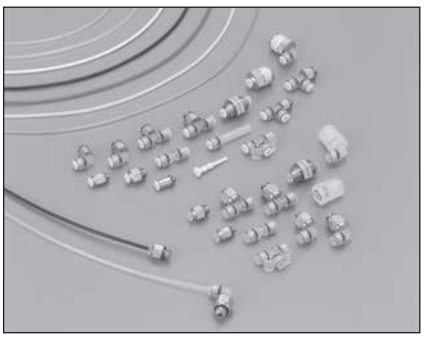

Applications: Air operated valve drive

Fiber tube® for push-in fitting

New ultrafine tubing with an enlarged inner diameter and one-touch fittings for greatly improved usability

●New O.D. gripping structure used
●Expanded bore size from ø1.0 to ø1.2 for approx. three times larger flow rate
●Tube piping capacity is small, thus energy saving/space saving
●Series of clean-room models using highly corrosion-resistant materials
●Attachable and detachable push-in fitting, standard PG Series, clean-room CG Series available

Auxiliary components

Fiber tube®

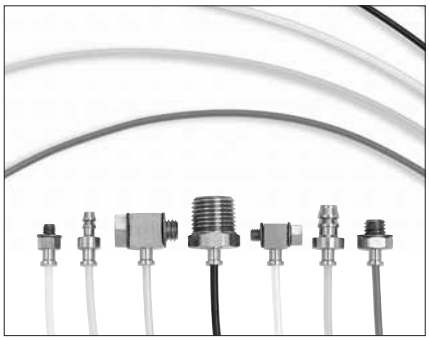

Piping-free ultra-fine tube

- Extremely fine tube as fine and flexible as lead wires
- O.D. ø1.8 and min. bending radius 4 mm
- Electrical resistance is approx. 1×10^7 Ω·cm Antistatic
- Ideal for fine speed cylinder piping
- Equipped with a wide range of tube colors and fittings

Applications: Air operated valve drive

Auxiliary components

FCS Series

Our proprietary hollow fiber membrane provides innovative filter performance

- High-precision filtration
  Hollow fiber membrane element has enabled 0.01 μm high precision filtration and 99.99% removal efficiency
- Long service life
  Considerably longer service life. Approximately five times longer than the flat membrane type
- Compact/lightweight/large flow rate
  A three to ten times filtration area enables larger flow rate and less pressure loss than the flat membrane-type of the same capacity. Lighter and more compact at the same flow rate
- Oil-prohibited specifications
  Parts are all degreased and cleaned. Production from assembly through packaging takes place in cleanrooms
- Easy maintenance
  Transparent case is used for resin type. Element contamination can be visually checked.
- Ample variations
  Two kinds of flow rate (500 and 1000 Series), resin and stainless steel materials, and mounting options of push-in fitting, male thread piping and female thread piping are available.

Applications: Purge Air, purification of N_2

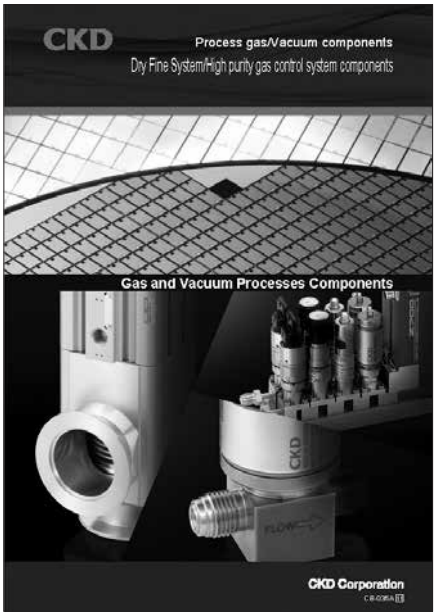

Responding to high-level needs for semiconductor manufacturing process control

Dry Fine System
High purity gas control system components

Catalog No.CB-035A

- Industry top performance and reliability
- Super clean room with advanced specifications and an integrated production system from design to assembly and packaging realize high quality.
- Variety of versatile fitting variations

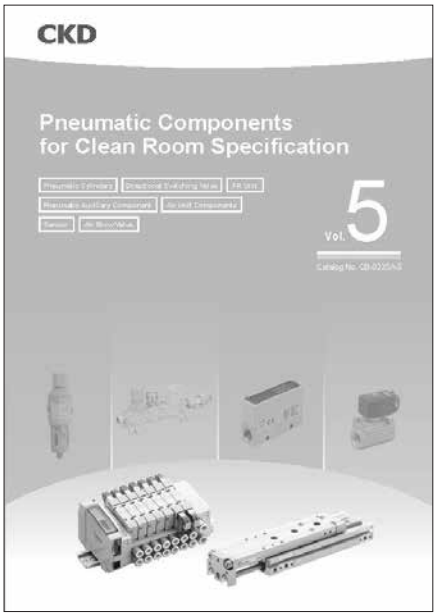

Components for clean room specifications

Catalog No.CB-33SA

Satisfies the various levels of clean room cleanliness in a wide range of industries

Reliably producing high cleanliness air

Clean blow system model circuit

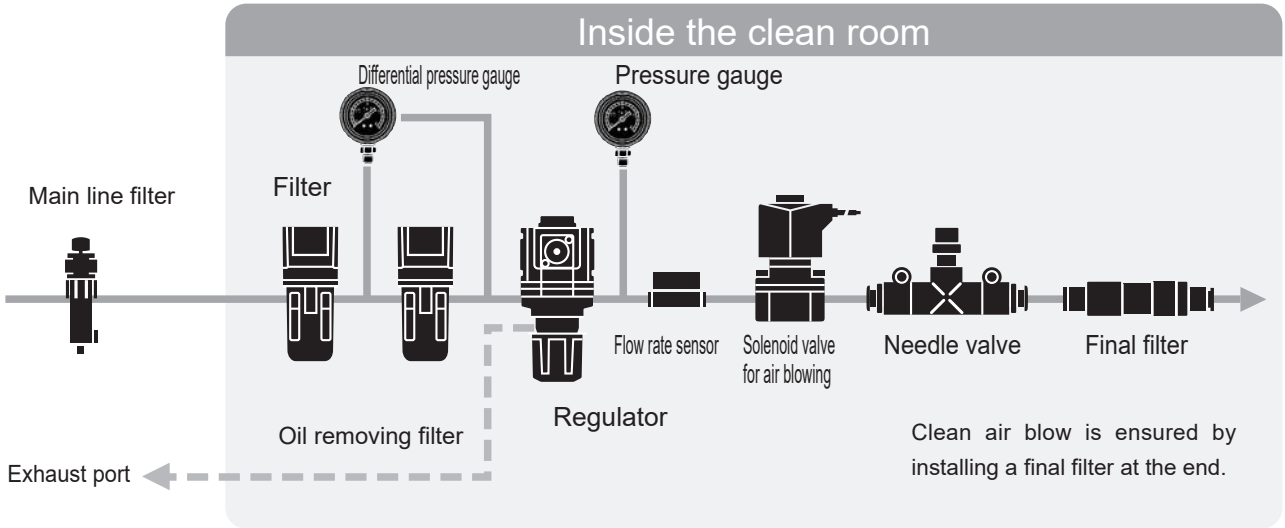

●Zero particle generation with vacuum treatment and exhaust port

Air-driven actuator system circuit structure

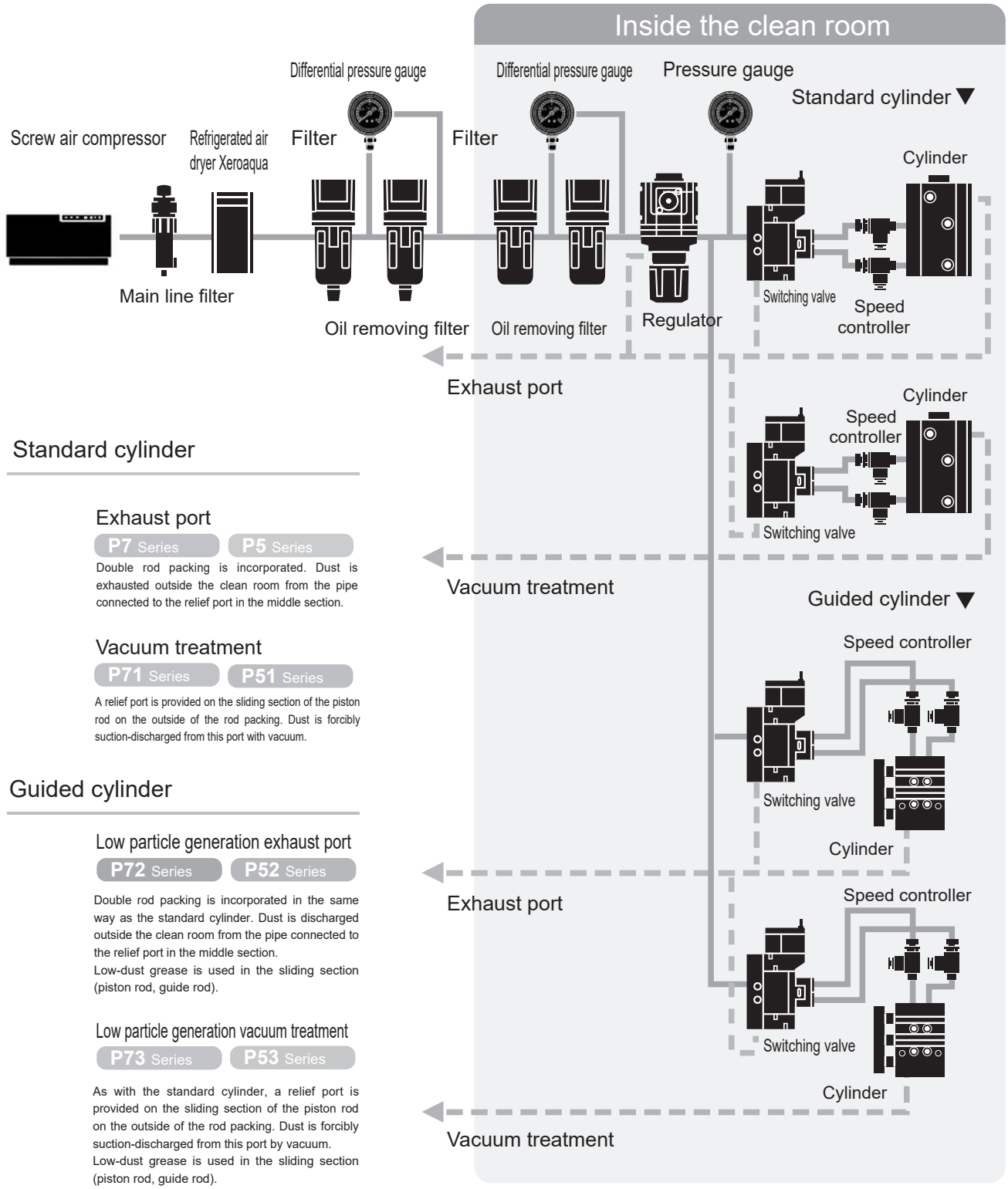

Standard cylinder

Exhaust port

P7 Series P5 Series

Double rod packing is incorporated. Dust is exhausted outside the clean room from the pipe connected to the relief port in the middle section.

Vacuum treatment

P71 Series P51 Series

A relief port is provided on the sliding section of the piston rod on the outside of the rod packing. Dust is forcibly suction-discharged from this port with vacuum.

Guided cylinder

Low particle generation exhaust port

P72 Series P52 Series

Double rod packing is incorporated in the same way as the standard cylinder. Dust is discharged outside the clean room from the pipe connected to the relief port in the middle section.
Low-dust grease is used in the sliding section (piston rod, guide rod).

Low particle generation vacuum treatment

P73 Series P53 Series

As with the standard cylinder, a relief port is provided on the sliding section of the piston rod on the outside of the rod packing. Dust is forcibly suction-discharged from this port by vacuum.
Low-dust grease is used in the sliding section (piston rod, guide rod).

Homepage

Catalog PDFs and CAD data of CKD products are available for download.
You can also contact us regarding our products.

https://www.ckd.co.jp/en/

For PDF and DXF data of the general catalogs,

CKD website **Component products**	>	**Materials/download** **Digital catalogs/catalog PDFs**

For PDF and DXF data of new products,

CKD website **Component products**	>	**Search product list** **Search new products**

For 2D/3D CAD data

CKD website **Component products**	>	**Materials/download** **2D/3D CAD data**

For product inquiries, please contact

CKD website **Component products**	>	**Component product/support** **Contact Form**

Fine System component special website

https://www.ckd.co.jp/semiconductor/en/

Have any questions concerning chemical liquid, gas or vacuum control? Feel free to contact us for details!

- I need to control fluctuations in flow rate
- I need to prevent dripping when the valve is closed
- I need to switch between multiple chemical liquids in a compact manner
- I need a proposal for a set of pneumatic valves.

Department in charge: F.S. Development Dept.
Phone: +81-52-217-2385

WORLD-NETWORK

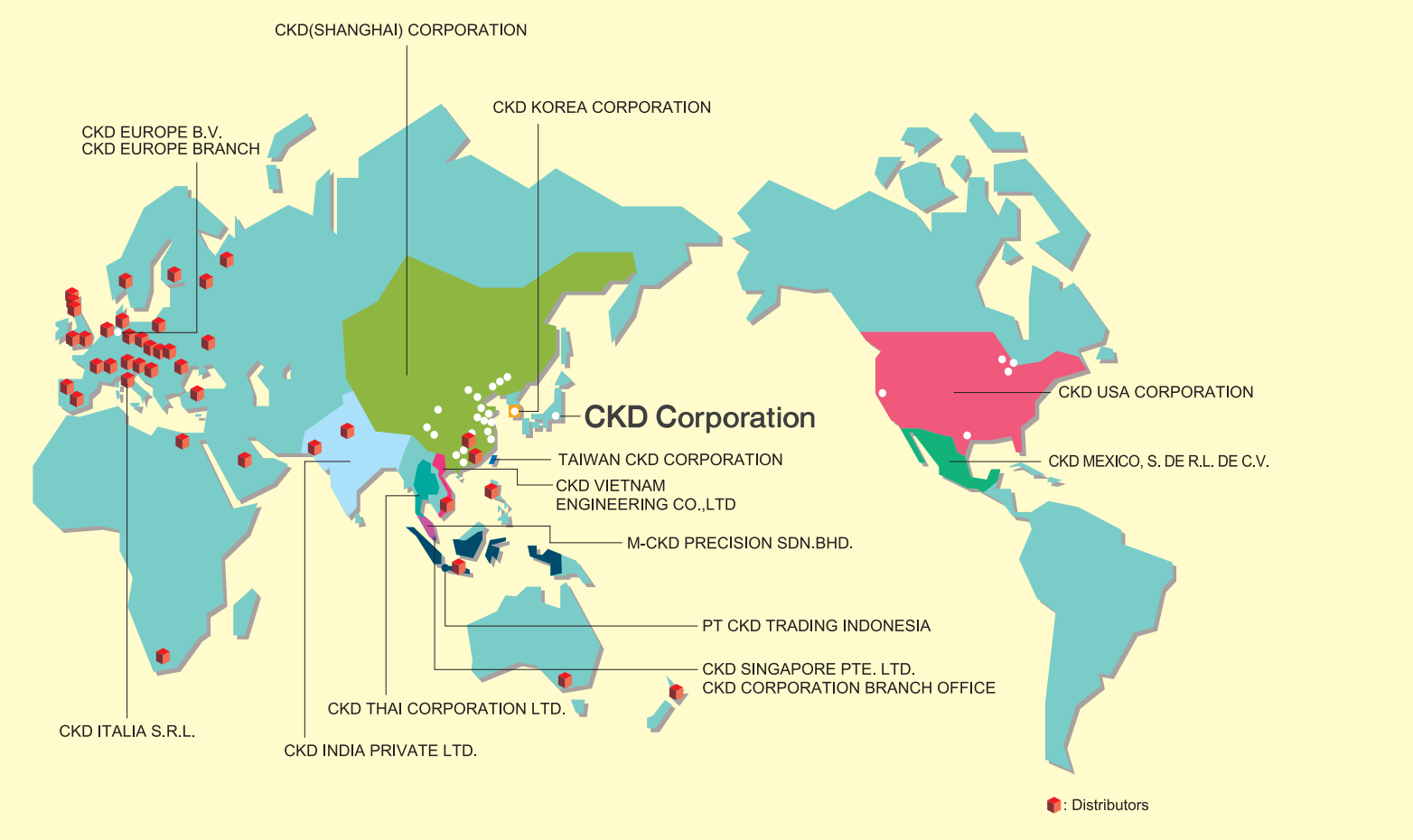

CKD Corporation

Website https://www.ckd.co.jp/en/

□ 2-250 Ouji, Komaki City, Aichi 485-8551, Japan
□ PHONE +81-568-74-1338 FAX +81-568-74-1165

ASIA

喜開理(上海)機器有限公司
CKD(SHANGHAI)CORPORATION

- 本社/上海徐匯支店(SALES HEADQUARTERS / SHANGHAI XUHUI BRANCH OFFICE)
  Room 612, 6th Floor, Yuanzhongkeyan Building, No. 1905 Hongmei Road, Xuhui District, Shanghai 200233, China
  PHONE +86-21-61911888 / 60906048
- 上海浦東支店(SHANGHAI PUDONG BRANCH OFFICE)
- 寧波支店(NINGBO BRANCH OFFICE)
- 杭州支店(HANGZHOU BRANCH OFFICE)
- 無錫支店(WUXI BRANCH OFFICE)
- 昆山支店(KUNSHAN BRANCH OFFICE)
- 蘇州支店(SUZHOU BRANCH OFFICE)
- 常州支店(CHANGZHOU BRANCH OFFICE)
- 南京支店(NANJING BRANCH OFFICE)
- 合肥支店(HEFEI BRANCH OFFICE)
- 成都支店(CHENGDU BRANCH OFFICE)
- 武漢支店(WUHAN BRANCH OFFICE)
- 鄭州支店(ZHENGZHOU BRANCH OFFICE)
- 長沙支店(CHANGSHA BRANCH OFFICE)
- 重慶支店(CHONGQING BRANCH OFFICE)
- 西安支店(XIAN BRANCH OFFICE)
- 広州支店(GUANGZHOU BRANCH OFFICE)
- 深圳支店(SHENZHEN BRANCH OFFICE)
- 東莞支店(DONGGUAN BRANCH OFFICE)
- 厦門支店(XIAMEN BRANCH OFFICE)
- 福州支店(FUZHOU BRANCH OFFICE)
- 惠州支店(HUIZHOU BRANCH OFFICE)
- 瀋陽支店(SHENYANG BRANCH OFFICE)
- 大連支店(DALIAN BRANCH OFFICE)
- 北京支店(BEIJING BRANCH OFFICE)
- 天津支店(TIANJIN BRANCH OFFICE)
- 青島支店(QINGDAO BRANCH OFFICE)
- 済南支店(JINAN BRANCH OFFICE)

CKD INDIA PRIVATE LTD.

- HEADQUARTERS
  Unit No. 607, 6th Floor, Welldone Tech Park, Sector 48, Sohna Road, Gurgaon-122018, Haryana, India
  PHONE +91-124-418-8212
- BANGALORE OFFICE
- PUNE OFFICE
- CHENNAI OFFICE
- MUMBAI OFFICE
- HYDERABAD OFFICE

PT CKD TRADING INDONESIA

- HEAD OFFICE
  Menara Bidakara 2, 18th Floor, Jl. Jend. Gatot Subroto Kav. 71-73, Pancoran, Jakarta 12870, Indonesia
  PHONE +62-21-2938-6601 FAX +62-21-2906-9470
- MEDAN OFFICE
- BEKASI OFFICE
- KARAWANG OFFICE
- SEMARANG OFFICE
- SURABAYA OFFICE

CKD KOREA CORPORATION

- HEADQUARTERS
  (3rd Floor), 44, Sinsu-ro, Mapo-gu, Seoul 04088, Korea
  PHONE +82-2-783-5201～5203 FAX +82-2-783-5204
- 水原事務所(SUWON OFFICE)
- 天安事務所(CHEONAN OFFICE)
- 蔚山事務所(ULSAN OFFICE)

M-CKD PRECISION SDN.BHD.

- HEAD OFFICE
  Lot No.6,Jalan Modal 23/2, Seksyen 23, Kawasan MIEL, Fasa 8, 40300 Shah Alam,Selangor Darul Ehsan, Malaysia
  PHONE +60-3-5541-1468 FAX +60-3-5541-1533
- JOHOR BAHRU BRANCH OFFICE
- PENANG BRANCH OFFICE

CKD SINGAPORE PTE. LTD.

No.33 Tannery Lane #04-01 Hoesteel Industrial Building, Singapore 347789, Singapore
PHONE +65-67442623 FAX +65-67442486

CKD CORPORATION BRANCH OFFICE

No.33 Tannery Lane #04-01 Hoesteel Industrial Building, Singapore 347789, Singapore
PHONE +65-67447260

CKD THAI CORPORATION LTD.

- HEADQUARTERS
  44, Smooth Life Tower, 19th Floor, Unit 1902, North Sathorn Road, Silom, Bangrak, Bangkok 10500, Thailand
  PHONE +66-2-267-6300 FAX +66-2-267-6304-5
- NAVANAKORN OFFICE
- EASTERN SEABOARD OFFICE
- LAMPHUN OFFICE
- KORAT OFFICE
- AMATANAKORN OFFICE
- PRACHINBURI OFFICE
- SARABURI OFFICE

台湾喜開理股份有限公司
TAIWAN CKD CORPORATION

- HEADQUARTERS
  16F-3, No. 7, Sec. 3, New Taipei Blvd., Xinzhuang Dist., New Taipei City 242, Taiwan
  PHONE +886-2-8522-8198 FAX +886-2-8522-8128
- 新竹営業所(HSINCHU OFFICE)
- 台中営業所(TAICHUNG OFFICE)
- 台南営業所(TAINAN OFFICE)
- 高雄営業所(KAOHSIUNG OFFICE)

CKD VIETNAM ENGINEERING CO.,LTD.

- HEADQUARTERS
  18th Floor, CMC Tower, Duy Tan Street, Cau Giay District, Hanoi, Vietnam
  PHONE +84-24-3795-7631 FAX +84-24-3795-7637
- HO CHI MINH OFFICE

EUROPE

CKD EUROPE B.V.

- HEADQUARTERS
  Beechavenue 125A, 1119 RB Schiphol-Rijk, the Netherlands
  PHONE +31-23-554-1490
- CKD EUROPE GERMANY OFFICE
- CKD EUROPE UK
- CKD EUROPE CZECH O.Z.

CKD CORPORATION EUROPE BRANCH

Beechavenue 125A, 1119 RB Schiphol-Rijk, the Netherlands
PHONE +31-23-554-1490

CKD ITALIA S.R.L.

- HEADQUARTERS
  Via di Fibbiana 15 Calenzano (FI) CAP 50041, Italy
  PHONE +39 0558825359 FAX +39 0558827376
- MILANO OFFICE

NORTH AMERICA & LATIN AMERICA

CKD MEXICO, S. DE R.L. DE C.V.

Cerrada la Noria No. 200 Int. A-01, Querétaro Park II, Parque Industrial Querétaro, Santa Rosa Jáuregui, Querétaro, C.P. 76220, México
PHONE +52-442-161-0624

CKD USA CORPORATION

- HEADQUARTERS
  1605 Penny Lane, Schaumburg, IL 60173, USA
  PHONE +1-847-648-4400 FAX +1-847-565-4923
- LEXINGTON OFFICE
- SAN JOSE OFFICE/ TECHNICAL CENTER
- AUSTIN OFFICE

The goods and/or their replicas, the technology and/or software found in this catalog are subject to complementary export regulations by Foreign Exchange and Foreign Trade Law of Japan. If the goods and/or their replicas, the technology and/or software found in this catalog are to be exported from Japan, Japanese laws require the exporter makes sure that they will never be used for the development and/or manufacture of weapons for mass destruction.

•Specifications are subject to change without notice.

© CKD Corporation 2025 All copy rights reserved.

Components for Pure water/Chemical liquids

Wet Fine Components General Catalog

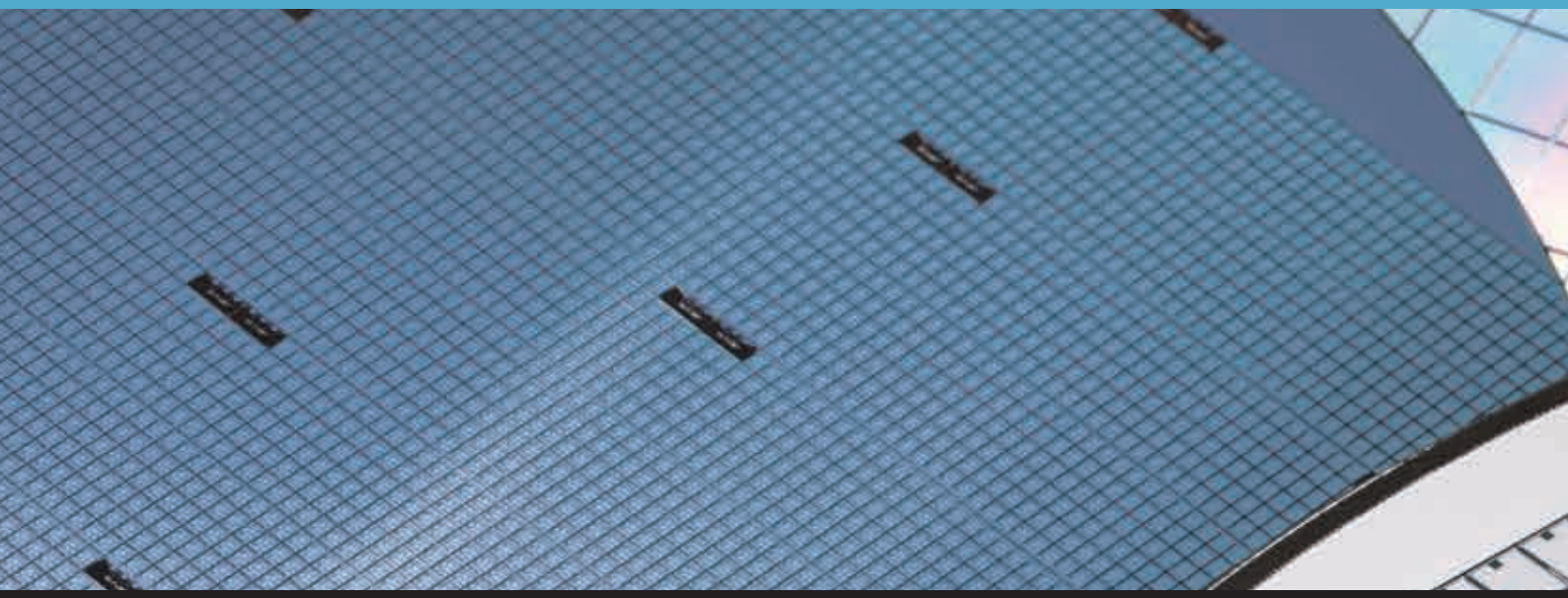

CKD Corporation [Website] https://www.ckd.co.jp/en/

● The specifications and appearances listed in this catalog may change without prior notice for improvement.
● Specifications are subject to change without notice.

Ⓒ CKD Corporation 2025 All copy rights reserved.

2025.6